FUSO – A Daimler Truck Group Brand

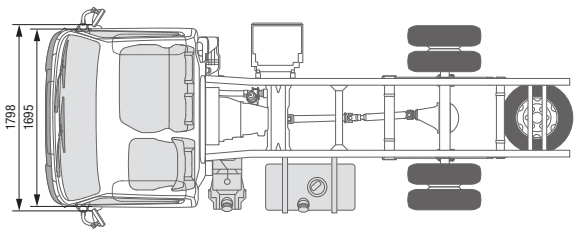

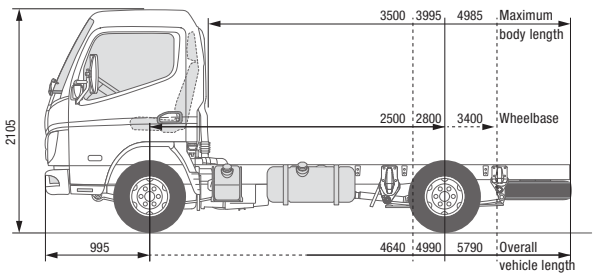

CANTER 3S13
LEFT-HAND DRIVE

MODEL / VEHICLE TYPE		3S13		
Cab type / crew		Standard, single cab / 3		
Model variant		46900211	46900311	46900511
FUSO model code		FEA01BL4SEUW	FEA01CL4SEUW	FEA01EL4SEUW
DIMENSIONS [MM]				
Wheelbase		2500	2800	3400
Overall length		4640	4990	5790
Cab length			1510	
Width overall			1798	
Cab width			1695	
Height overall			2105	
Track width	Front / rear		1405 / 1255	
Frame height (at end of frame)			725	
Ground clearance			165	
Cab to rear axle		1975	2275	2875
Cab to end of frame		3120	3470	4270
Maximum body length**		3500	3995	4985
Frame width			700	
Front overhang			995	
Rear overhang		1145	1195	1395
Front axle to front of body			625	
Recommended distance cab to body			100	
WEIGHTS [KG]				
Empty weight*		1940	1950	1980
	Front* / rear*	1420 / 520	1440 / 510	1445 / 535
Minimum vehicle weight			2355	
Gross vehicle weight / gross combination weight			3500 / 7000	
Axle loads*	Front / rear		1950 / 2500	
Towed weight	Braked / unbraked		3500 / 750	
Chassis load bearing capacity*		1560	1550	1520
CALCULATED OUTPUT				
Maximum speed	km/h		140	
Minimum turning circle [m]	Kerb to kerb	9.0	10.0	11.8
	Wall to wall	10.2	11.2	13.0

* The weight refers to the base vehicle (European series, including coolant, oil, 90% fuel, tyre sealant, tools and driver with 75 kg) without optional equipment. If any optional equipment is added, the weight changes accordingly. ** Calculated maximum value which should be checked depending on the body and application.
Subject to change without notice. All data is approximate. The illustrations may contain accessories and items of optional equipment which are not part of the standard specification. The data sheet may contain product types and support services not available in certain countries.

FUSO – A Daimler Truck Group Brand

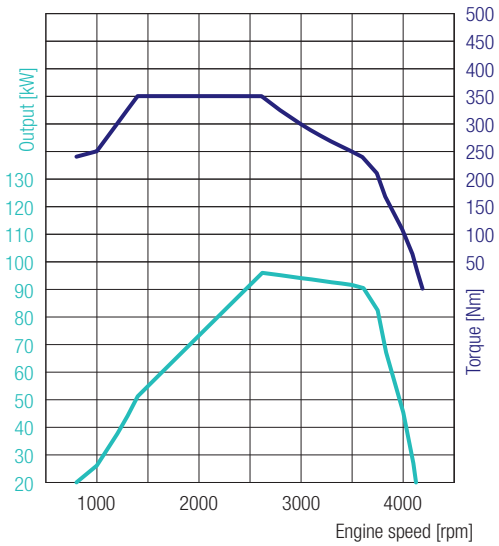

CANTER 3S13
LEFT-HAND DRIVE

4P10 – 96 kW (130 PS)
350 Nm@1400 rpm
96 kW@2620 rpm

ENGINE (EURO VI)			
Type		Water-cooled four-stroke diesel engine with turbocharger, intercooler and direct injection	
No. of cylinders		4/in-line	
Capacity		2998 cm^3	
Peak output		96 kW (130 hp) / 2620 rpm	
Rated torque		350 Nm / 1400 rpm	
Diesel particulate filter		Service life approx. 300,000 km	
Alternator		Alternating current 12 V, 140 A	
Exhaust gas aftertreatment		DPF + SCR	
PTO (optional)	Type	31 kW with flange	31 kW for directly connected pumps
	Torque at peak output [Nm]:	196 Nm	
	Gear ratios	1:0.655	1:0.651
	Engine speed at peak output	1500 rpm	
POWERTRAIN			
Transmission	Model	Manual gearbox, 5 forward gears, 1 reverse gear	
	Gear ratio	5.494 / 3.193 / 1.689 / 1.000 / 0.723 / reverse 5.494	
Rear axle gear ratio	Ratio	4.111	
CHASSIS			
Front axle / rear axle	Model	F100T / R015T	
	Load-bearing capacity front/rear	1950 kg / 2500 kg	
Tyres		195/75R16C 107/105 R	
		Twin tyres at rear	
Wheel		16 x 5 JK - 110	
Steering		Left-hand drive	
		Rack-and-pinion steering with power assist, tilting telescopic steering column with steering-wheel lock	
Brake	Service brake	Hydraulic with vacuum power assist, dual-circuit with load-dependent brake proportioning valve at rear wheels	
	Front / rear	Disc brake (217 × 24)	
	Parking brake	Mechanical expanding brake on drive shaft at rear of transmission	
	Auxiliary brake	Exhaust brake (50 kW)	
Suspension	Front / rear	Independent wheel suspension (coil spring) with shock absorber / semi-elliptic leaf spring with shock absorber	
Frame	Type	Ladder-type frame with reinforcements and crossmembers	
Fuel tank capacity		70 litres	
Electrical system	Batteries	12 V (100 Ah - 760 A(EN))	

FUSO – A Daimler Truck Group Brand

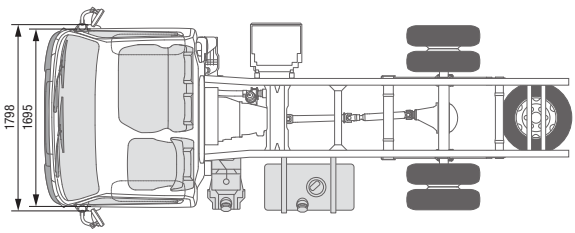

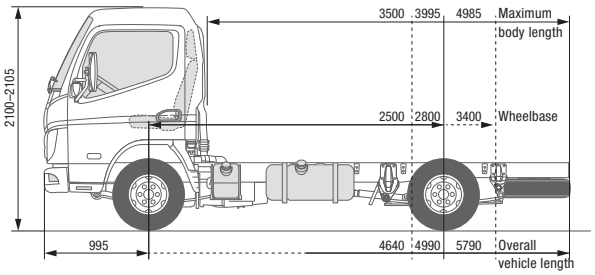

CANTER 3S13 DUONIC® 2.0
LEFT-HAND DRIVE

MODEL / VEHICLE TYPE		3S13		
Cab type / crew		Standard, single cab / 3		
Model variant		46901211	46901311	46901511
FUSO model code		FEA01BL3SEUW	FEA01CL3SEUW	FEA01EL3SEUW
DIMENSIONS [MM]				
Wheelbase		2500	2800	3400
Overall length		4640	4990	5790
Cab length			1510	
Width overall			1798	
Cab width			1695	
Height overall		2100		2105
Track width	Front / rear		1405 / 1255	
Frame height (at end of frame)		715		710
Ground clearance			165	
Cab to rear axle		1975	2275	2875
Cab to end of frame		3120	3470	4270
Maximum body length**		3500	3995	4985
Frame width			700	
Front overhang			995	
Rear overhang		1145	1195	1395
Front axle to front of body			625	
Recommended distance cab to body			100	
WEIGHTS [KG]				
Empty weight*		1960	1970	1990
	Front* / rear*	1440 / 520	1455 / 515	1455 / 535
Minimum vehicle weight		2180	2205	
Gross vehicle weight / gross combination weight			3500 / 7000	
Axle loads*	Front / rear		1950 / 2500	
Towed weight	Braked / unbraked		3500 / 750	
Chassis load bearing capacity*		1540	1530	1510
CALCULATED OUTPUT				
Maximum speed	km/h		140	
Minimum turning circle [m]	Kerb to kerb	9.0	10.0	11.8
	Wall to wall	10.2	11.2	13.0

* The weight refers to the base vehicle (European series, including coolant, oil, 90% fuel, tyre sealant, tools and driver with 75 kg) without optional equipment. If any optional equipment is added, the weight changes accordingly. ** Calculated maximum value which should be checked depending on the body and application.
Subject to change without notice. All data is approximate. The illustrations may contain accessories and items of optional equipment which are not part of the standard specification. The data sheet may contain product types and support services not available in certain countries.

FUSO – A Daimler Truck Group Brand

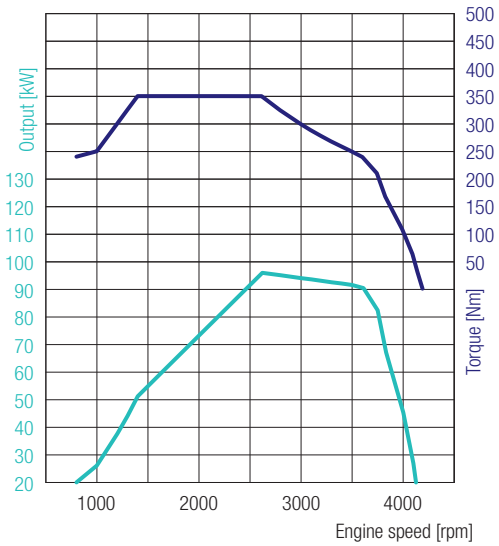

CANTER 3S13 DUONIC® 2.0
LEFT-HAND DRIVE

4P10 – 96 kW (130 PS)
350 Nm@1400 rpm
96 kW@2620 rpm

ENGINE (EURO VI)			
Type		Water-cooled four-stroke diesel engine with turbocharger, intercooler and direct injection	
No. of cylinders		4/in-line	
Capacity		2998 cm³	
Peak output		96 kW (130 hp) / 2620 rpm	
Rated torque		350 Nm / 1400 rpm	
Diesel particulate filter		Service life approx. 300,000 km	
Alternator		Alternating current 12 V, 140 A	
Exhaust gas aftertreatment		DPF + SCR	
PTO (optional)	Type	31 kW with flange	31 kW for directly connected pumps
	Torque at peak output [Nm]:	196 Nm	
	Gear ratios	1:0.655	1:0.651
	Engine speed at peak output	1500 rpm	
POWERTRAIN			
Transmission	Model	DUONIC® 2.0: Automated transmission with dual clutch, 6 forward speeds and 1 reverse gear	
	Gear ratio	5.397 / 3.788 / 2.310 / 1.474 / 1.000 / 0.701 / reverse 5.397	
Rear axle gear ratio	Ratio	4.111	
CHASSIS			
Front axle / rear axle	Model	F100T / R015T	
	Load-bearing capacity front/rear	1950 kg / 2500 kg	
Tyres		195/75R16C 107/105 R	
		Twin tyres at rear	
Wheel		16 x 5 JK - 110	
Steering		Left-hand drive	
		Rack-and-pinion steering with power assist, tilting telescopic steering column with steering-wheel lock	
Brake	Service brake	Hydraulic with vacuum power assist, dual-circuit with load-dependent brake proportioning valve at rear wheels	
	Front / rear	Disc brake (217 × 24)	
	Parking brake	Mechanical expanding brake on drive shaft at rear of transmission	
	Auxiliary brake	Exhaust brake (50 kW)	
Suspension	Front / rear	Independent wheel suspension (coil spring) with shock absorber / semi-elliptic leaf spring with shock absorber	
Frame	Type	Ladder-type frame with reinforcements and crossmembers	
Fuel tank capacity		70 litres	
Electrical system	Batteries	12 V (100 Ah - 760 A(EN))	

FUSO – A Daimler Truck Group Brand

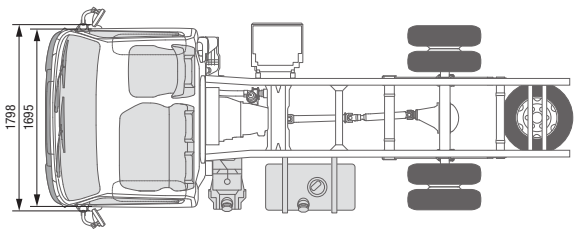

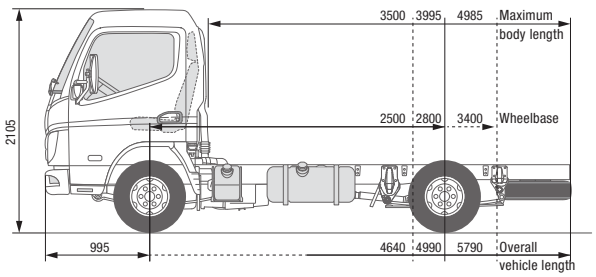

CANTER 3S13
RIGHT-HAND DRIVE

MODEL / VEHICLE TYPE		3S13		
Cab type / crew		Standard, single cab / 3		
Model variant		46900221	46900321	46900521
FUSO model code		FEA01BR4SEUW	FEA01CR4SEUW	FEA01ER4SEUW
DIMENSIONS [MM]				
Wheelbase		2500	2800	3400
Overall length		4640	4990	5790
Cab length			1510	
Width overall			1798	
Cab width			1695	
Height overall			2105	
Track width	Front / rear		1405 / 1255	
Frame height (at end of frame)			715	
Ground clearance			165	
Cab to rear axle		1975	2275	2875
Cab to end of frame		3120	3470	4270
Maximum body length**		3500	3995	4985
Frame width			700	
Front overhang			995	
Rear overhang		1145	1195	1395
Front axle to front of body			625	
Recommended distance cab to body			100	
WEIGHTS [KG]				
Empty weight*		1940	1950	1980
	Front* / rear*	1420 / 520	1440 / 510	1445 / 535
Minimum vehicle weight			2355	
Gross vehicle weight / gross combination weight			3500 / 7000	
Axle loads*	Front / rear		1950 / 2500	
Towed weight	Braked / unbraked		3500 / 750	
Chassis load bearing capacity*		1560	1550	1520
CALCULATED OUTPUT				
Maximum speed	km/h		140	
Minimum turning circle [m]	Kerb to kerb	9.0	10.0	9.0
	Wall to wall	10.2	11.2	10.2

* The weight refers to the base vehicle (European series, including coolant, oil, 90% fuel, tyre sealant, tools and driver with 75 kg) without optional equipment. If any optional equipment is added, the weight changes accordingly. ** Calculated maximum value which should be checked depending on the body and application.
Subject to change without notice. All data is approximate. The illustrations may contain accessories and items of optional equipment which are not part of the standard specification. The data sheet may contain product types and support services not available in certain countries.

FUSO – A Daimler Truck Group Brand

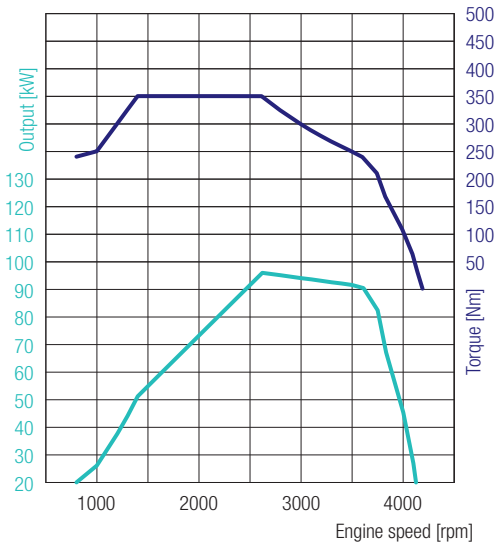

CANTER 3S13
RIGHT-HAND DRIVE

4P10 – 96 kW (130 PS)
350 Nm@1400 rpm
96 kW@2620 rpm

ENGINE (EURO VI)			
Type		Water-cooled four-stroke diesel engine with turbocharger, intercooler and direct injection	
No. of cylinders		4/in-line	
Capacity		2998 cm^3	
Peak output		96 kW (130 hp) / 2620 rpm	
Rated torque		350 Nm / 1400 rpm	
Diesel particulate filter		Service life approx. 300,000 km	
Alternator		Alternating current 12 V, 140 A	
Exhaust gas aftertreatment		DPF + SCR	
PTO (optional)	Type	31 kW with flange	31 kW for directly connected pumps
	Torque at peak output [Nm]:	196 Nm	
	Gear ratios	1:0.655	1:0.651
	Engine speed at peak output	1500 rpm	
POWERTRAIN			
Transmission	Model	Manual gearbox, 5 forward gears, 1 reverse gear	
	Gear ratio	5.494 / 3.193 / 1.689 / 1.000 / 0.723 / reverse 5.494	
Rear axle gear ratio	Ratio	4.111	
CHASSIS			
Front axle / rear axle	Model	F100T / R015T	
	Load-bearing capacity front/rear	1950 kg / 2500 kg	
Tyres		195/75R16C 107/105 R	
		Twin tyres at rear	
Wheel		16 x 5 JK - 110	
Steering		Right-hand drive	
		Rack-and-pinion steering with power assist, tilting telescopic steering column with steering-wheel lock	
Brake	Service brake	Hydraulic with vacuum power assist, dual-circuit with load-dependent brake proportioning valve at rear wheels	
	Front / rear	Disc brake (217 × 24)	
	Parking brake	Mechanical expanding brake on drive shaft at rear of transmission	
	Auxiliary brake	Exhaust brake (50 kW)	
Suspension	Front / rear	Independent wheel suspension (coil spring) with shock absorber / semi-elliptic leaf spring with shock absorber	
Frame	Type	Ladder-type frame with reinforcements and crossmembers	
Fuel tank capacity		70 litres	
Electrical system	Batteries	12 V (100 Ah - 760 A(EN))	

FUSO – A Daimler Truck Group Brand

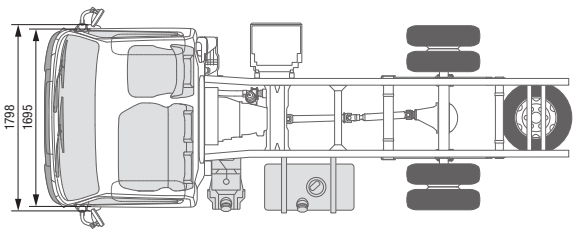

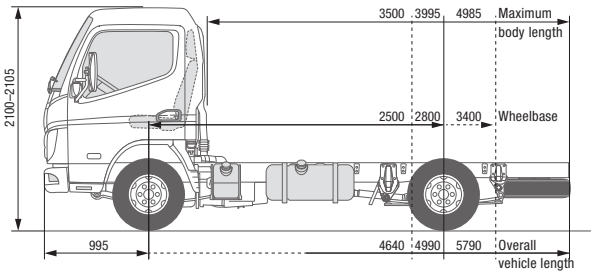

CANTER 3S13 DUONIC® 2.0
RIGHT-HAND DRIVE

MODEL / VEHICLE TYPE		3S13		
Cab type / crew		Standard, single cab / 3		
Model variant		46901221	46901321	46901521
FUSO model code		FEA01BR3SEUW	FEA01CR3SEUW	FEA01ER3SEUW
DIMENSIONS [MM]				
Wheelbase		2500	2800	3400
Overall length		4640	4990	5790
Cab length		1510		
Width overall		1798		
Cab width		1695		
Height overall		2100		2105
Track width	Front / rear	1405 / 1255		
Frame height (at end of frame)		720		
Ground clearance		165		
Cab to rear axle		1975	2275	2875
Cab to end of frame		3120	3470	4270
Maximum body length**		3500	3995	4985
Frame width		700		
Front overhang		995		
Rear overhang		1145	1195	1395
Front axle to front of body		625		
Recommended distance cab to body		100		
WEIGHTS [KG]				
Empty weight*		1960	1970	1990
	Front* / rear*	1440 / 520	1455 / 515	1455 / 535
Minimum vehicle weight		2180	2205	
Gross vehicle weight / gross combination weight		3500 / 7000		
Axle loads*	Front / rear	1950 / 2500		
Towed weight	Braked / unbraked	3500 / 750		
Chassis load bearing capacity*		1540	1530	1510
CALCULATED OUTPUT				
Maximum speed	km/h	140		
Minimum turning circle [m]	Kerb to kerb	9.0	10.0	11.8
	Wall to wall	10.2	11.2	13.0

* The weight refers to the base vehicle (European series, including coolant, oil, 90% fuel, tyre sealant, tools and driver with 75 kg) without optional equipment. If any optional equipment is added, the weight changes accordingly. ** Calculated maximum value which should be checked depending on the body and application.
Subject to change without notice. All data is approximate. The illustrations may contain accessories and items of optional equipment which are not part of the standard specification. The data sheet may contain product types and support services not available in certain countries.

FUSO – A Daimler Truck Group Brand

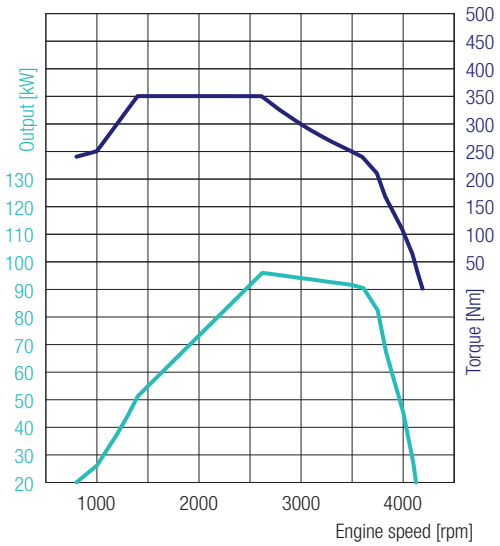

CANTER 3S13 DUONIC® 2.0
RIGHT-HAND DRIVE

4P10 – 96 kW (130 PS)
350 Nm@1400 rpm
96 kW@2620 rpm

ENGINE (EURO VI)			
Type		Water-cooled four-stroke diesel engine with turbocharger, intercooler and direct injection	
No. of cylinders		4/in-line	
Capacity		2998 cm³	
Peak output		96 kW (130 hp) / 2620 rpm	
Rated torque		350 Nm / 1400 rpm	
Diesel particulate filter		Service life approx. 300,000 km	
Alternator		Alternating current 12 V, 140 A	
Exhaust gas aftertreatment		DPF + SCR	
PTO (optional)	Type	31 kW with flange	31 kW for directly connected pumps
	Torque at peak output [Nm]:	196 Nm	
	Gear ratios	1:0.655	1:0.651
	Engine speed at peak output	1500 rpm	
POWERTRAIN			
Transmission	Model	DUONIC® 2.0: Automated transmission with dual clutch, 6 forward speeds and 1 reverse gear	
	Gear ratio	5.397 / 3.788 / 2.310 / 1.474 / 1.000 / 0.701 / reverse 5.397	
Rear axle gear ratio	Ratio	4.111	
CHASSIS			
Front axle / rear axle	Model	F100T / R015T	
	Load-bearing capacity front/rear	1950 kg / 2500 kg	
Tyres		195/75R16C 107/105 R	
		Twin tyres at rear	
Wheel		16 x 5 JK - 110	
Steering		Right-hand drive	
		Rack-and-pinion steering with power assist, tilting telescopic steering column with steering-wheel lock	
Brake	Service brake	Hydraulic with vacuum power assist, dual-circuit with load-dependent brake proportioning valve at rear wheels	
	Front / rear	Disc brake (217s24)	
	Parking brake	Mechanical expanding brake on drive shaft at rear of transmission	
	Auxiliary brake	Exhaust brake (50 kW)	
Suspension	Front / rear	Independent wheel suspension (coil spring) with shock absorber / semi-elliptic leaf spring with shock absorber	
Frame	Type	Ladder-type frame with reinforcements and crossmembers	
Fuel tank capacity		70 litres	
Electrical system	Batteries	12 V (100 Ah - 760 A(EN))	

FUSO – A Daimler Truck Group Brand

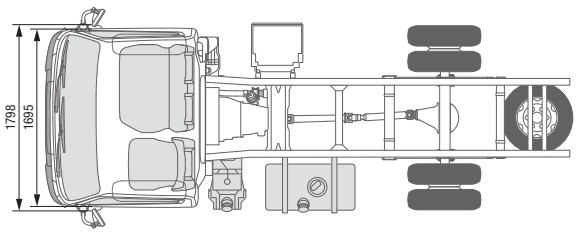

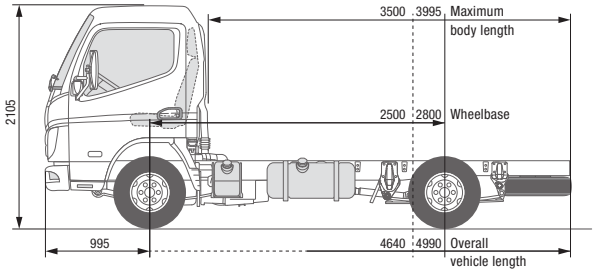

CANTER 3S15
LEFT-HAND DRIVE

MODEL / VEHICLE TYPE		3S15	
Cab type / crew		Standard, single cab / 3	
Model variant		46902211	46902311
FUSO model code		FEA01BL4SEUX	FEA01CL4SEUX
DIMENSIONS [MM]			
Wheelbase		2500	2800
Overall length		4640	4990
Cab length		1510	
Width overall		1798	
Cab width		1695	
Height overall		2105	
Track width	Front / rear	1405 / 1255	
Frame height (at end of frame)		725	
Ground clearance		165	
Cab to rear axle		1975	2275
Cab to end of frame		3120	3470
Maximum body length**		3500	3995
Frame width		700	
Front overhang		995	
Rear overhang		1145	1195
Front axle to front of body		625	
Recommended distance cab to body		100	
WEIGHTS [KG]			
Empty weight*		1940	1950
	Front* / rear*	1420 / 520	1440 / 510
Minimum vehicle weight		2150	2180
Gross vehicle weight / gross combination weight		3500 / 7000	
Axle loads*	Front / rear	1950 / 2500	
Towed weight	Braked / unbraked	3500 / 750	
Chassis load bearing capacity*		1560	1550
CALCULATED OUTPUT			
Maximum speed	km/h	145	
Minimum turning circle [m]	Kerb to kerb	9.0	10.0
	Wall to wall	10.2	11.2

* The weight refers to the base vehicle (European series, including coolant, oil, 90% fuel, tyre sealant, tools and driver with 75 kg) without optional equipment. If any optional equipment is added, the weight changes accordingly. ** Calculated maximum value which should be checked depending on the body and application.
Subject to change without notice. All data is approximate. The illustrations may contain accessories and items of optional equipment which are not part of the standard specification. The data sheet may contain product types and support services not available in certain countries.

FUSO – A Daimler Truck Group Brand

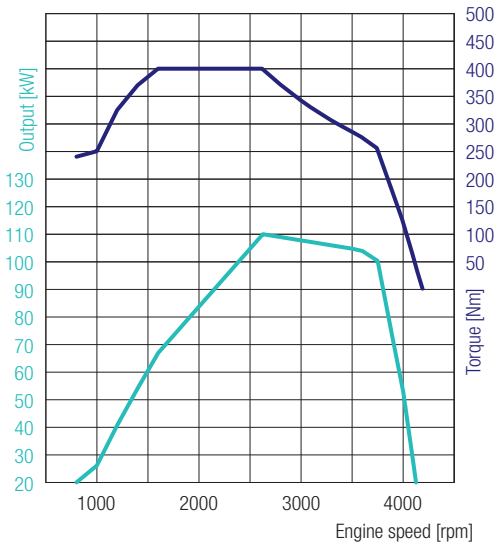

CANTER 3S15
LEFT-HAND DRIVE

4P10 – 110 kW (150 PS)
400 Nm@1600 rpm
110 kW@2626 rpm

ENGINE (EURO VI)			
Type		Water-cooled four-stroke diesel engine with turbocharger, intercooler and direct injection	
No. of cylinders		4/in-line	
Capacity		2998 cm³	
Peak output		110 kW (150 hp) / 2626 rpm	
Rated torque		400 Nm / 1600 rpm	
Diesel particulate filter		Service life approx. 300,000 km	
Alternator		Alternating current 12 V, 140 A	
Exhaust gas aftertreatment		DPF + SCR	
PTO (optional)	Type	31 kW with flange	31 kW for directly connected pumps
	Torque at peak output [Nm]:	196 Nm	
	Gear ratios	1:0.644	1:0.638
	Engine speed at peak output	1500 rpm	
POWERTRAIN			
Transmission	Model	Manual gearbox, 5 forward gears, 1 reverse gear	
	Gear ratio	5.494 / 3.193 / 1.689 / 1.000 / 0.723 / reverse 5.494	
Rear axle gear ratio	Ratio	4.111	
CHASSIS			
Front axle / rear axle	Model	F100T / R015T	
	Load-bearing capacity front/rear	1950 kg / 2500 kg	
Tyres		195/75R16C 107/105 R	
		Twin tyres at rear	
Wheel		16 x 5 JK - 110	
Steering		Left-hand drive	
		Rack-and-pinion steering with power assist, tilting telescopic steering column with steering-wheel lock	
Brake	Service brake	Hydraulic with vacuum power assist, dual-circuit with load-dependent brake proportioning valve at rear wheels	
	Front / rear	Disc brake (217 × 24)	
	Parking brake	Mechanical expanding brake on drive shaft at rear of transmission	
	Auxiliary brake	Exhaust brake (50 kW)	
Suspension	Front / rear	Independent wheel suspension (coil spring) with shock absorber / semi-elliptic leaf spring with shock absorber	
Frame	Type	Ladder-type frame with reinforcements and crossmembers	
Fuel tank capacity		70 litres	
Electrical system	Batteries	12 V (100 Ah - 760 A(EN))	

FUSO – A Daimler Truck Group Brand

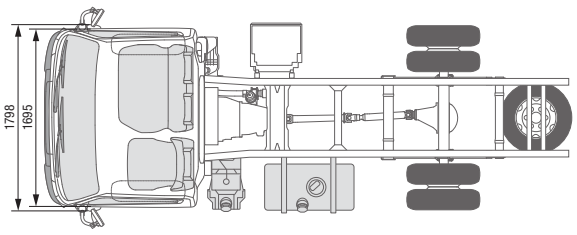

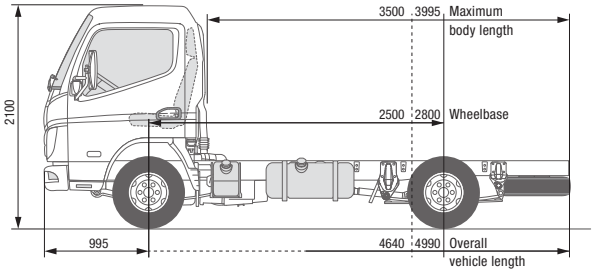

CANTER 3S15 DUONIC® 2.0
LEFT-HAND DRIVE

MODEL / VEHICLE TYPE		3S15	
Cab type / crew		Standard, single cab / 3	
Model variant		46903211	46903311
FUSO model code		FEA01BL3SEUX	FEA01CL3SEUX
DIMENSIONS [MM]			
Wheelbase		2500	2800
Overall length		4640	4990
Cab length		1510	
Width overall		1798	
Cab width		1695	
Height overall		2100	
Track width	Front / rear	1405 / 1255	
Frame height (at end of frame)		730	725
Ground clearance		165	
Cab to rear axle		1975	2275
Cab to end of frame		3120	3470
Maximum body length**		3500	3995
Frame width		700	
Front overhang		995	
Rear overhang		1145	1195
Front axle to front of body		625	
Recommended distance cab to body		100	
WEIGHTS [KG]			
Empty weight*		1960	1970
	Front* / rear*	1440 / 520	1455 / 515
Minimum vehicle weight		2180	2205
Gross vehicle weight / gross combination weight		3500 / 7000	
Axle loads*	Front / rear	1950 / 2500	
Towed weight	Braked / unbraked	3500 / 750	
Chassis load bearing capacity*		1540	1530
CALCULATED OUTPUT			
Maximum speed	km/h	145	
Minimum turning circle [m]	Kerb to kerb	9.0	10.0
	Wall to wall	10.2	11.2

* The weight refers to the base vehicle (European series, including coolant, oil, 90% fuel, tyre sealant, tools and driver with 75 kg) without optional equipment. If any optional equipment is added, the weight changes accordingly. ** Calculated maximum value which should be checked depending on the body and application.
Subject to change without notice. All data is approximate. The illustrations may contain accessories and items of optional equipment which are not part of the standard specification. The data sheet may contain product types and support services not available in certain countries.

FUSO – A Daimler Truck Group Brand

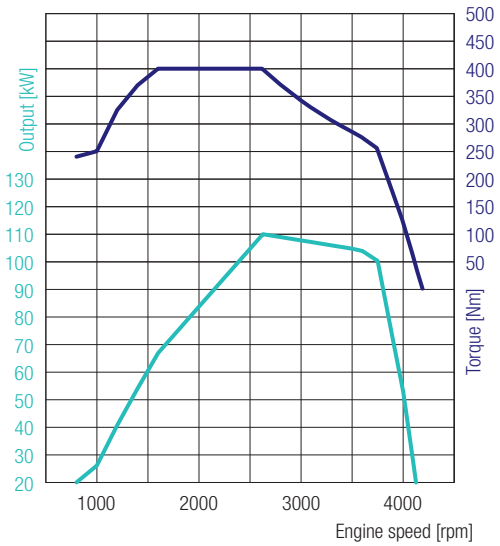

CANTER 3S15 DUONIC® 2.0
LEFT-HAND DRIVE

4P10 – 110 kW (150 PS)
400 Nm@1600 rpm
110 kW@2626 rpm

ENGINE (EURO VI)			
Type		Water-cooled four-stroke diesel engine with turbocharger, intercooler and direct injection	
No. of cylinders		4/in-line	
Capacity		2998 cm^3	
Peak output		110 kW (150 hp) / 2626 rpm	
Rated torque		400 Nm / 1600 rpm	
Diesel particulate filter		Service life approx. 300,000 km	
Alternator		Alternating current 12 V, 140 A	
Exhaust gas aftertreatment		DPF + SCR	
PTO (optional)	Type	31 kW with flange	31 kW for directly connected pumps
	Torque at peak output [Nm]:	196 Nm	
	Gear ratios	1:0.655	1:0.651
	Engine speed at peak output	1500 rpm	
POWERTRAIN			
Transmission	Model	DUONIC® 2.0: Automated transmission with dual clutch, 6 forward speeds and 1 reverse gear	
	Gear ratio	5.397 / 3.788 / 2.310 / 1.474 / 1.000 / 0.701 / reverse 5.397	
Rear axle gear ratio	Ratio	4.111	
CHASSIS			
Front axle / rear axle	Model	F100T / R015T	
	Load-bearing capacity front/rear	1950 kg / 2500 kg	
Tyres		195/75R16C 107/105 R	
		Twin tyres at rear	
Wheel		16 x 5 JK - 110	
Steering		Left-hand drive	
		Rack-and-pinion steering with power assist, tilting telescopic steering column with steering-wheel lock	
Brake	Service brake	Hydraulic with vacuum power assist, dual-circuit with load-dependent brake proportioning valve at rear wheels	
	Front / rear	Disc brake (217 × 24)	
	Parking brake	Mechanical expanding brake on drive shaft at rear of transmission	
	Auxiliary brake	Exhaust brake (50 kW)	
Suspension	Front / rear	Independent wheel suspension (coil spring) with shock absorber / semi-elliptic leaf spring with shock absorber	
Frame	Type	Ladder-type frame with reinforcements and crossmembers	
Fuel tank capacity		70 litres	
Electrical system	Batteries	12 V (100 Ah - 760 A(EN))	

FUSO – A Daimler Truck Group Brand

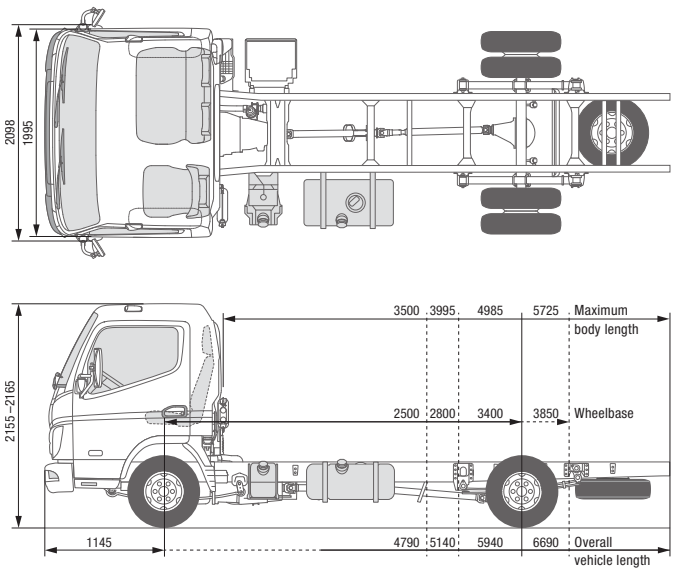

CANTER 3C13
LEFT-HAND DRIVE

MODEL / VEHICLE TYPE		3C13			
Cab type / crew		Comfort, single cab / 3			
Model variant		46904211	46904311	46904511	46904711
FUSO model code		FEB01BL4SEUW	FEB01CL4SEUW	FEB01EL4SEUW	FEB01GL4SEUW
DIMENSIONS [MM]					
Wheelbase		2500	2800	3400	3850
Overall length		4790	5140	5940	6690
Cab length		1625			
Width overall		2098			
Cab width		1995			
Height overall		2165	2160	2160	2155
Track width	Front / rear	1665 / 1500			
Frame height (at end of frame)		740		765	
Ground clearance		165			
Cab to rear axle		1975	2275	2875	3325
Cab to end of frame		3120	3470	4270	5020
Maximum body length**		3500	3995	4985	5725
Frame width		750			
Front overhang		1145			
Rear overhang		1145	1195	1395	1695
Front axle to front of body		625			
Recommended distance cab to body		100			
WEIGHTS [KG]					
Empty weight*		2040	2050	2070	2090
	Front* / rear*	1510 / 530	1525 / 525	1530 / 540	1550 / 540
Minimum vehicle weight		2290	2310	2315	2345
Gross vehicle weight / gross combination weight		3500 / 7000			
Axle loads*	Front / rear	1950 / 2500			
Towed weight	Braked / unbraked	3500 / 750			
Chassis load bearing capacity*		1460	1450	1430	1410
CALCULATED OUTPUT					
Maximum speed	km/h	132			
Minimum turning circle [m]	Kerb to kerb	8.6	9.4	11.2	12.4
	Wall to wall	10.0	11.0	12.6	14.0

* The weight refers to the base vehicle (European series, including coolant, oil, 90% fuel, tyre sealant, tools and driver with 75 kg) without optional equipment. If any optional equipment is added, the weight changes accordingly. ** Calculated maximum value which should be checked depending on the body and application.
Subject to change without notice. All data is approximate. The illustrations may contain accessories and items of optional equipment which are not part of the standard specification. The data sheet may contain product types and support services not available in certain countries.

FUSO – A Daimler Truck Group Brand

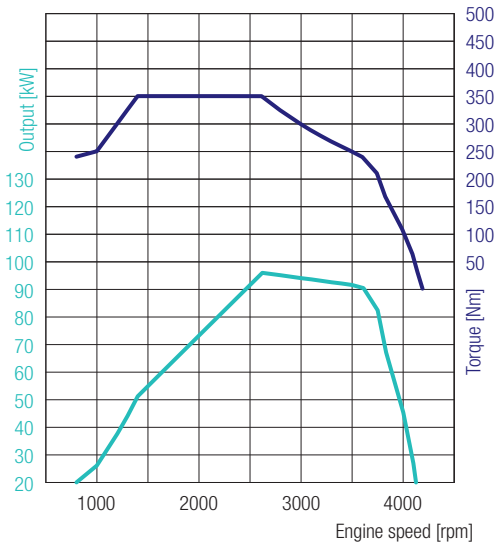

CANTER 3C13
LEFT-HAND DRIVE

4P10 – 96 kW (130 PS)
350 Nm@1400 rpm
96 kW@2620 rpm

ENGINE (EURO VI)			
Type		Water-cooled four-stroke diesel engine with turbocharger, intercooler and direct injection	
No. of cylinders		4/in-line	
Capacity		2998 cm³	
Peak output		96 kW (130 hp) / 2620 rpm	
Rated torque		350 Nm / 1400 rpm	
Diesel particulate filter		Service life approx. 300,000 km	
Alternator		Alternating current 12 V, 140 A	
Exhaust gas aftertreatment		DPF + SCR	
PTO (optional)	Type	31 kW with flange	31 kW for directly connected pumps
	Torque at peak output [Nm]:	196 Nm	
	Gear ratios	1:0.644	1:0.638
	Engine speed at peak output	1500 rpm	
POWERTRAIN			
Transmission	Model	Manual gearbox, 5 forward gears, 1 reverse gear	
	Gear ratio	5.494 / 3.193 / 1.689 / 1.000 / 0.723 / reverse 5.494	
Rear axle gear ratio	Ratio	4.111	
CHASSIS			
Front axle / rear axle	Model	F100T / R015T	
	Load-bearing capacity front/rear	1950 kg / 2500 kg	
Tyres		195/75R16C 107/105 R	
		Twin tyres at rear	
Wheel		16 x 5 JK - 110	
Steering		Left-hand drive	
		Rack-and-pinion steering with power assist, tilting telescopic steering column with steering-wheel lock	
Brake	Service brake	Hydraulic with vacuum power assist, dual-circuit with load-dependent brake proportioning valve at rear wheels	
	Front / rear	Disc brake (217 × 24)	
	Parking brake	Mechanical expanding brake on drive shaft at rear of transmission	
	Auxiliary brake	Exhaust brake (50 kW)	
Suspension	Front / rear	Independent wheel suspension (coil spring) with shock absorber/ semi-elliptic leaf spring with shock absorber and stabiliser	
Frame	Type	Ladder-type frame with reinforcements and crossmembers	
Fuel tank capacity		70 litres	
Electrical system	Batteries	12 V (100 Ah - 760 A(EN))	

FUSO – A Daimler Truck Group Brand

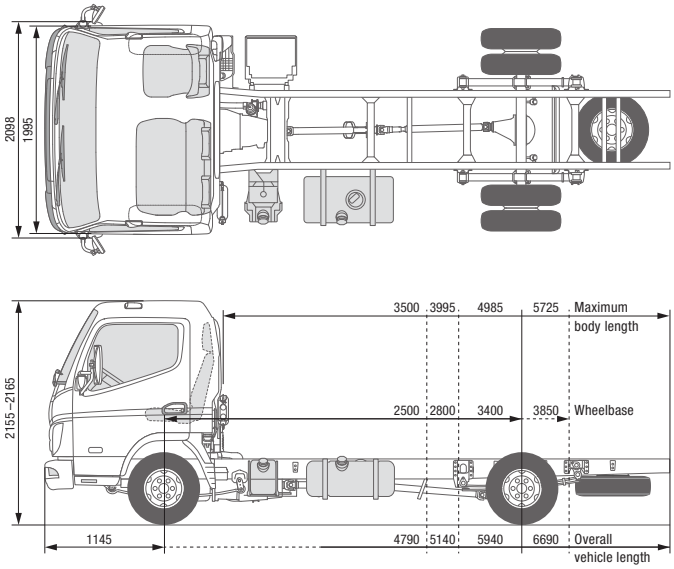

CANTER 3C13
RIGHT-HAND DRIVE

MODEL / VEHICLE TYPE		3C13			
Cab type / crew		Comfort, single cab / 3			
Model variant		46904221	46904321	46904521	46904721
FUSO model code		FEB01BR4SEUW	FEB01CR4SEUW	FEB01ER4SEUW	FEB01GR4SEUW
DIMENSIONS [MM]					
Wheelbase		2500	2800	3400	3850
Overall length		4790	5140	5940	6690
Cab length		1625			
Width overall		2098			
Cab width		1995			
Height overall		2165	2160	2160	2155
Track width	Front / rear	1665 / 1500			
Frame height (at end of frame)		750			
Ground clearance		165			
Cab to rear axle		1975	2275	2875	3325
Cab to end of frame		3120	3470	4270	5020
Maximum body length**		3500	3995	4985	5725
Frame width		750			
Front overhang		1145			
Rear overhang		1145	1195	1395	1695
Front axle to front of body		625			
Recommended distance cab to body		100			
WEIGHTS [KG]					
Empty weight*		2040	2050	2070	2090
	Front* / rear*	1510 / 530	1525 / 525	1530 / 540	1550 / 540
Minimum vehicle weight		2290	2310	2315	2345
Gross vehicle weight / gross combination weight		3500 / 7000			
Axle loads*	Front / rear	1950 / 2500			
Towed weight	Braked / unbraked	3500 / 750			
Chassis load bearing capacity*		1460	1450	1430	1410
CALCULATED OUTPUT					
Maximum speed	km/h	132			
Minimum turning circle [m]	Kerb to kerb	8.6	9.4	11.2	12.4
	Wall to wall	10.0	11.0	12.6	14.0

* The weight refers to the base vehicle (European series, including coolant, oil, 90% fuel, tyre sealant, tools and driver with 75 kg) without optional equipment. If any optional equipment is added, the weight changes accordingly. ** Calculated maximum value which should be checked depending on the body and application.
Subject to change without notice. All data is approximate. The illustrations may contain accessories and items of optional equipment which are not part of the standard specification. The data sheet may contain product types and support services not available in certain countries.

FUSO – A Daimler Truck Group Brand

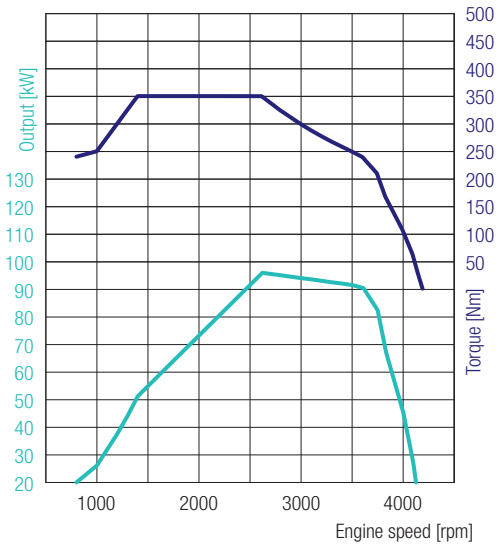

CANTER 3C13
RIGHT-HAND DRIVE

4P10 – 96 kW (130 PS)
350 Nm@1400 rpm
96 kW@2620 rpm

ENGINE (EURO VI)			
Type		Water-cooled four-stroke diesel engine with turbocharger, intercooler and direct injection	
No. of cylinders		4/in-line	
Capacity		2998 cm³	
Peak output		96 kW (130 hp) / 2620 rpm	
Rated torque		350 Nm / 1400 rpm	
Diesel particulate filter		Service life approx. 300,000 km	
Alternator		Alternating current 12 V, 140 A	
Exhaust gas aftertreatment		DPF + SCR	
PTO (optional)	Type	31 kW with flange	31 kW for directly connected pumps
	Torque at peak output [Nm]:	196 Nm	
	Gear ratios	1:0.644	1:0.638
	Engine speed at peak output	1500 rpm	
POWERTRAIN			
Transmission	Model	Manual gearbox, 5 forward gears, 1 reverse gear	
	Gear ratio	5.494 / 3.193 / 1.689 / 1.000 / 0.723 / reverse 5.494	
Rear axle gear ratio	Ratio	4.111	
CHASSIS			
Front axle / rear axle	Model	F100T / R015T	
	Load-bearing capacity front/rear	1950 kg / 2500 kg	
Tyres		195/75R16C 107/105 R	
		Twin tyres at rear	
Wheel		16 x 5 JK - 110	
Steering		Right-hand drive	
		Rack-and-pinion steering with power assist, tilting telescopic steering column with steering-wheel lock	
Brake	Service brake	Hydraulic with vacuum power assist, dual-circuit with load-dependent brake proportioning valve at rear wheels	
	Front / rear	Disc brake (217 × 24)	
	Parking brake	Mechanical expanding brake on drive shaft at rear of transmission	
	Auxiliary brake	Exhaust brake (50 kW)	
Suspension	Front / rear	Independent wheel suspension (coil spring) with shock absorber / semi-elliptic leaf spring with shock absorber and stabiliser	
Frame	Type	Ladder-type frame with reinforcements and crossmembers	
Fuel tank capacity		70 litres	
Electrical system	Batteries	12 V (100 Ah - 760 A(EN))	

FUSO – A Daimler Truck Group Brand

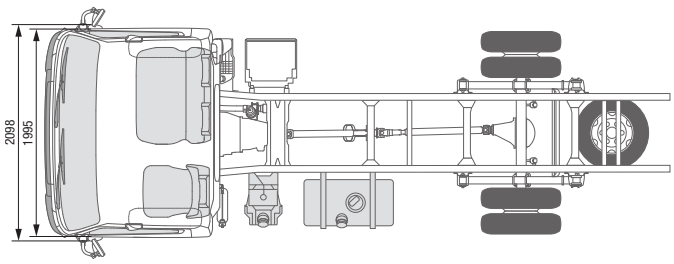

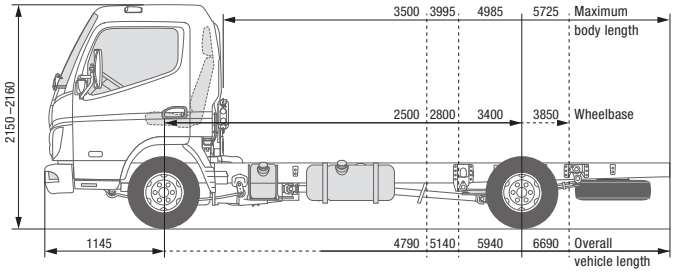

CANTER 3C13 DUONIC® 2.0
LEFT-HAND DRIVE

MODEL / VEHICLE TYPE		3C13			
Cab type / crew		Comfort, single cab / 3			
Model variant		46905211	46905311	46905511	46905711
FUSO model code		FEB01BL3SEUW	FEB01CL3SEUW	FEB01EL3SEUW	FEB01GL3SEUW
DIMENSIONS [MM]					
Wheelbase		2500	2800	3400	3850
Overall length		4790	5140	5940	6690
Cab length		1625			
Width overall		2098			
Cab width		1995			
Height overall		2160	2155	2155	2150
Track width	Front / rear	1665 / 1500			
Frame height (at end of frame)		745		765	770
Ground clearance		165			
Cab to rear axle		1975	2275	2875	3325
Cab to end of frame		3120	3470	4270	5020
Maximum body length**		3500	3995	4985	5725
Frame width		750			
Front overhang		1145			
Rear overhang		1145	1195	1395	1695
Front axle to front of body		625			
Recommended distance cab to body		100			
WEIGHTS [KG]					
Empty weight*		2060	2070	2095	2110
	Front* / rear*	1525 / 535	1540 / 530	1550 / 545	1565 / 545
Minimum vehicle weight		2310	2335	2350	2370
Gross vehicle weight / gross combination weight		3500 / 7000			
Axle loads*	Front / rear	1950 / 2500			
Towed weight	Braked / unbraked	3500 / 750			
Chassis load bearing capacity*		1440	1430	1405	1390
CALCULATED OUTPUT					
Maximum speed	km/h	131			
Minimum turning circle [m]	Kerb to kerb	8.6	9.4	11.2	12.4
	Wall to wall	10.0	11.0	12.6	14.0

* The weight refers to the base vehicle (European series, including coolant, oil, 90% fuel, tyre sealant, tools and driver with 75 kg) without optional equipment. If any optional equipment is added, the weight changes accordingly. ** Calculated maximum value which should be checked depending on the body and application.
Subject to change without notice. All data is approximate. The illustrations may contain accessories and items of optional equipment which are not part of the standard specification. The data sheet may contain product types and support services not available in certain countries.

FUSO – A Daimler Truck Group Brand

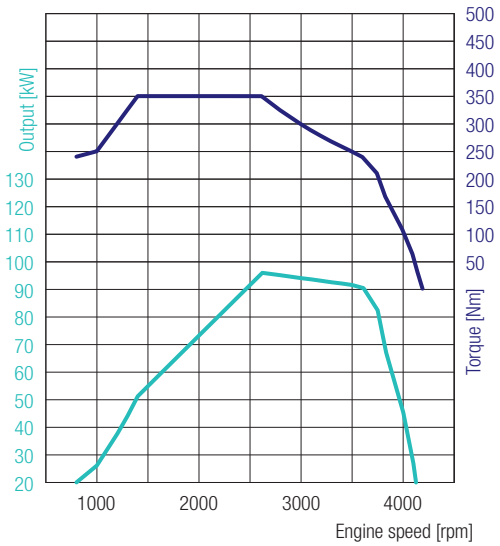

CANTER 3C13 DUONIC® 2.0
LEFT-HAND DRIVE

4P10 – 96 kW (130 PS)
350 Nm@1400 rpm
96 kW@2620 rpm

ENGINE (EURO VI)			
Type		Water-cooled four-stroke diesel engine with turbocharger, intercooler and direct injection	
No. of cylinders		4/in-line	
Capacity		2998 cm³	
Peak output		96 kW (130 hp) / 2620 rpm	
Rated torque		350 Nm / 1400 rpm	
Diesel particulate filter		Service life approx. 300,000 km	
Alternator		Alternating current 12 V, 140 A	
Exhaust gas aftertreatment		DPF + SCR	
PTO (optional)	Type	31 kW with flange	31 kW for directly connected pumps
	Torque at peak output [Nm]:	196 Nm	
	Gear ratios	1:0.655	1:0.651
	Engine speed at peak output	1500 rpm	
POWERTRAIN			
Transmission	Type	DUONIC® 2.0: Automated transmission with dual clutch, 6 forward speeds and 1 reverse gear	
	Gear ratio	5.397 / 3.788 / 2.310 / 1.474 / 1.000 / 0.701 / reverse 5.397	
Rear axle gear ratio	Ratio	4.111	
CHASSIS			
Front axle / rear axle	Model	F100T / R015T	
	Load-bearing capacity front/rear	1950 kg / 2500 kg	
Tyres		195/75R16C 107/105 R	
		Twin tyres at rear	
Wheel		16 x 5 JK - 110	
Steering		Left-hand drive	
		Rack-and-pinion steering with power assist, tilting telescopic steering column with steering-wheel lock	
Brake	Service brake	Hydraulic with vacuum power assist, dual-circuit with load-dependent brake proportioning valve at rear wheels	
	Front / rear	Disc brake (217 × 24)	
	Parking brake	Mechanical expanding brake on drive shaft at rear of transmission	
	Auxiliary brake	Exhaust brake (50 kW)	
Suspension	Front / rear	Independent wheel suspension (coil spring) with shock absorber / semi-elliptic leaf spring with shock absorber and stabiliser	
Frame	Type	Ladder-type frame with reinforcements and crossmembers	
Fuel tank capacity		70 litres	
Electrical system	Batteries	12 V (100 Ah - 760 A(EN))	

FUSO – A Daimler Truck Group Brand

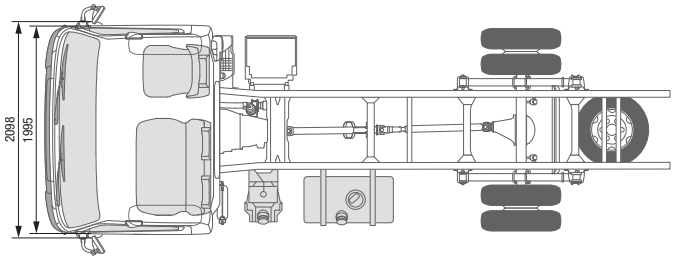

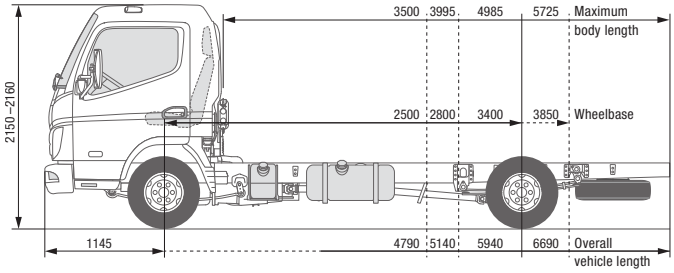

CANTER 3C13 DUONIC® 2.0
RIGHT-HAND DRIVE

MODEL / VEHICLE TYPE		3C13			
Cab type / crew		Comfort, single cab / 3			
Model variant		46905221	46905321	46905521	46905721
FUSO model code		FEB01BR3SEUW	FEB01CR3SEUW	FEB01ER3SEUW	FEB01GR3SEUW
DIMENSIONS [MM]					
Wheelbase		2500	2800	3400	3850
Overall length		4790	5140	5940	6690
Cab length		1625			
Width overall		2098			
Cab width		1995			
Height overall		2160	2155	2155	2150
Track width	Front / rear	1665 / 1500			
Frame height (at end of frame)		745		765	770
Ground clearance		165			
Cab to rear axle		1975	2275	2875	3325
Cab to end of frame		3120	3470	4270	5020
Maximum body length**		3500	3995	4985	5725
Frame width		750			
Front overhang		1145			
Rear overhang		1145	1195	1395	1695
Front axle to front of body		625			
Recommended distance cab to body		100			
WEIGHTS [KG]					
Empty weight*		2060	2070	2095	2110
	Front* / rear*	1525 / 535	1540 / 530	1550 / 545	1565 / 545
Minimum vehicle weight		2310	2335	2350	2370
Gross vehicle weight / gross combination weight		3500 / 7000			
Axle loads*	Front / rear	1950 / 2500			
Towed weight	Braked / unbraked	3500 / 750			
Chassis load bearing capacity*		1440	1430	1405	1390
CALCULATED OUTPUT					
Maximum speed	km/h	131			
Minimum turning circle [m]	Kerb to kerb	8.6	9.4	11.2	12.4
	Wall to wall	10.0	11.0	12.6	14.0

* The weight refers to the base vehicle (European series, including coolant, oil, 90% fuel, tyre sealant, tools and driver with 75 kg) without optional equipment. If any optional equipment is added, the weight changes accordingly. ** Calculated maximum value which should be checked depending on the body and application.
Subject to change without notice. All data is approximate. The illustrations may contain accessories and items of optional equipment which are not part of the standard specification. The data sheet may contain product types and support services not available in certain countries.

FUSO – A Daimler Truck Group Brand

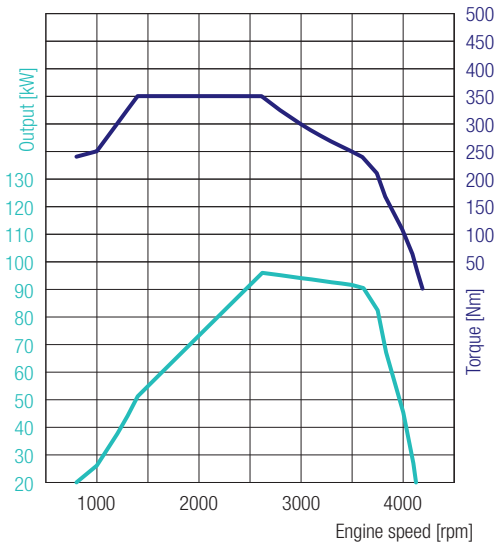

CANTER 3C13 DUONIC® 2.0
RIGHT-HAND DRIVE

4P10 – 96 kW (130 PS)
350 Nm@1400 rpm
96 kW@2620 rpm

ENGINE (EURO VI)			
Type		Water-cooled four-stroke diesel engine with turbocharger, intercooler and direct injection	
No. of cylinders		4/in-line	
Capacity		2998 cm³	
Peak output		96 kW (130 hp) / 2620 rpm	
Rated torque		350 Nm / 1400 rpm	
Diesel particulate filter		Service life approx. 300,000 km	
Alternator		Alternating current 12 V, 140 A	
Exhaust gas aftertreatment		DPF + SCR	
PTO (optional)	Type	31 kW with flange	31 kW for directly connected pumps
	Torque at peak output [Nm]:	196 Nm	
	Gear ratios	1:0.655	1:0.651
	Engine speed at peak output	1500 rpm	
POWERTRAIN			
Transmission	Model	DUONIC® 2.0: Automated transmission with dual clutch, 6 forward speeds and 1 reverse gear	
	Gear ratio	5.397 / 3.788 / 2.310 / 1.474 / 1.000 / 0.701 / reverse 5.397	
Rear axle gear ratio	Ratio	4.111	
CHASSIS			
Front axle / rear axle	Model	F100T / R015T	
	Load-bearing capacity front/rear	1950 kg / 2500 kg	
Tyres		195/75R16C 107/105 R	
		Twin tyres at rear	
Wheel		16 x 5 JK - 110	
Steering		Right-hand drive	
		Rack-and-pinion steering with power assist, tilting telescopic steering column with steering-wheel lock	
Brake	Service brake	Hydraulic with vacuum power assist, dual-circuit with load-dependent brake proportioning valve at rear wheels	
	Front / rear	Disc brake (217 × 24)	
	Parking brake	Mechanical expanding brake on drive shaft at rear of transmission	
	Auxiliary brake	Exhaust brake (50 kW)	
Suspension	Front / rear	Independent wheel suspension (coil spring) with shock absorber / semi-elliptic leaf spring with shock absorber and stabiliser	
Frame	Type	Ladder-type frame with reinforcements and crossmembers	
Fuel tank capacity		70 litres	
Electrical system	Batteries	12 V (100 Ah - 760 A(EN))	

FUSO – A Daimler Truck Group Brand

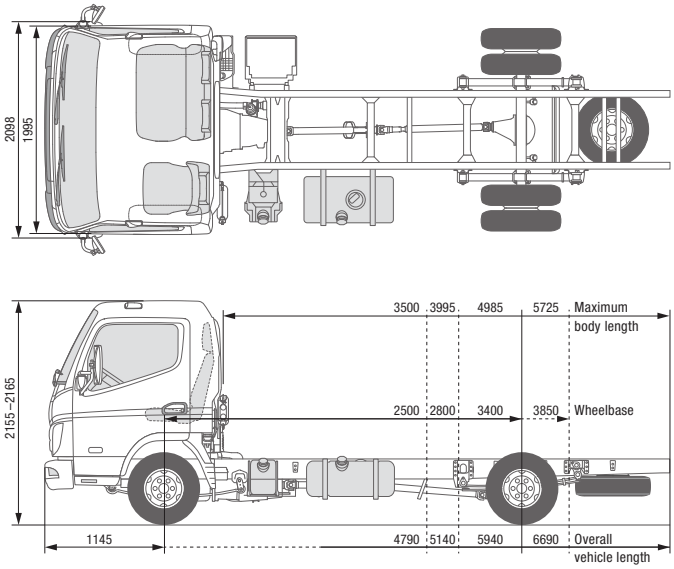

CANTER 3C15
LEFT-HAND DRIVE

MODEL / VEHICLE TYPE		3C15			
Cab type / crew		Comfort, single cab / 3			
Model variant		46906211	46906311	46906511	46906711
FUSO model code		FEB01BL4SEUX	FEB01CL4SEUX	FEB01EL4SEUX	FEB01GL4SEUX
DIMENSIONS [MM]					
Wheelbase		2500	2800	3400	3850
Overall length		4790	5140	5940	6690
Cab length		1625			
Width overall		2098			
Cab width		1995			
Height overall		2165	2160	2160	2155
Track width	Front / rear	1665 / 1500			
Frame height (at end of frame)		740		765	
Ground clearance		165			
Cab to rear axle		1975	2275	2875	3325
Cab to end of frame		3120	3470	4270	5020
Maximum body length**		3500	3995	4985	5725
Frame width		750			
Front overhang		1145			
Rear overhang		1145	1195	1395	1695
Front axle to front of body		625			
Recommended distance cab to body		100			
WEIGHTS [KG]					
Empty weight*		2040	2050	2070	2090
	Front* / rear*	1510 / 530	1525 / 525	1530 / 540	1550 / 540
Minimum vehicle weight		2290	2310	2315	2345
Gross vehicle weight / gross combination weight		3500 / 7000			
Axle loads*	Front / rear	1950 / 2500			
Towed weight	Braked / unbraked	3500 / 750			
Chassis load bearing capacity*		1460	1450	1430	1410
CALCULATED OUTPUT					
Maximum speed	km/h	136			
Minimum turning circle [m]	Kerb to kerb	8.6	9.4	11.2	12.4
	Wall to wall	10.0	11.0	12.6	14.0

* The weight refers to the base vehicle (European series, including coolant, oil, 90% fuel, tyre sealant, tools and driver with 75 kg) without optional equipment. If any optional equipment is added, the weight changes accordingly. ** Calculated maximum value which should be checked depending on the body and application.
Subject to change without notice. All data is approximate. The illustrations may contain accessories and items of optional equipment which are not part of the standard specification. The data sheet may contain product types and support services not available in certain countries.

FUSO – A Daimler Truck Group Brand

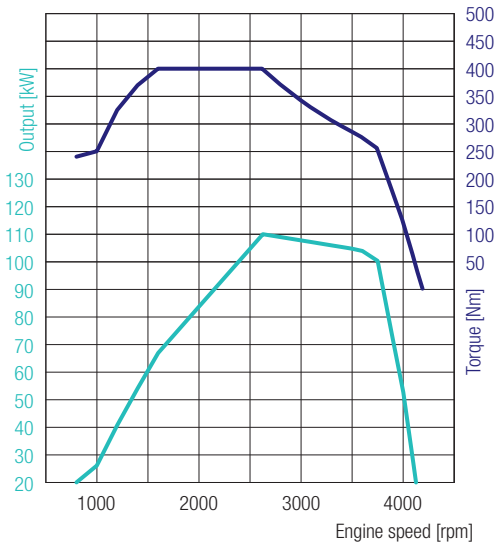

CANTER 3C15
LEFT-HAND DRIVE

4P10 – 110 kW (150 PS)
400 Nm@1600 rpm
110 kW@2626 rpm

ENGINE (EURO VI)			
Type		Water-cooled four-stroke diesel engine with turbocharger, intercooler and direct injection	
No. of cylinders		4/in-line	
Capacity		2998 cm³	
Peak output		110 kW (150 hp) / 2626 rpm	
Rated torque		400 Nm / 1600 rpm	
Diesel particulate filter		Service life approx. 300,000 km	
Alternator		Alternating current 12 V, 140 A	
Exhaust gas aftertreatment		DPF + SCR	
PTO (optional)	Type	31 kW with flange	31 kW for directly connected pumps
	Torque at peak output [Nm]:	196 Nm	
	Gear ratios	1:0.644	1:0.638
	Engine speed at peak output	1500 rpm	
POWERTRAIN			
Transmission	Model	Manual gearbox, 5 forward gears, 1 reverse gear	
	Gear ratio	5.494 / 3.193 / 1.689 / 1.000 / 0.723 / reverse 5.494	
Rear axle gear ratio	Ratio	4.111	
CHASSIS			
Front axle / rear axle	Model	F100T / R015T	
	Load-bearing capacity front/rear	1950 kg / 2500 kg	
Tyres		195/75R16C 107/105 R	
		Twin tyres at rear	
Wheel		16 x 5 JK - 110	
Steering		Left-hand drive	
		Rack-and-pinion steering with power assist, tilting telescopic steering column with steering-wheel lock	
Brake	Service brake	Hydraulic with vacuum power assist, dual-circuit with load-dependent brake proportioning valve at rear wheels	
	Front / rear	Disc brake (217 × 24)	
	Parking brake	Mechanical expanding brake on drive shaft at rear of transmission	
	Auxiliary brake	Exhaust brake (50 kW)	
Suspension	Front / rear	Independent wheel suspension (coil spring) with shock absorber / semi-elliptic leaf spring with shock absorber and stabiliser	
Frame	Type	Ladder-type frame with reinforcements and crossmembers	
Fuel tank capacity		70 litres	
Electrical system	Batteries	12 V (100 Ah - 760 A(EN))	

FUSO – A Daimler Truck Group Brand

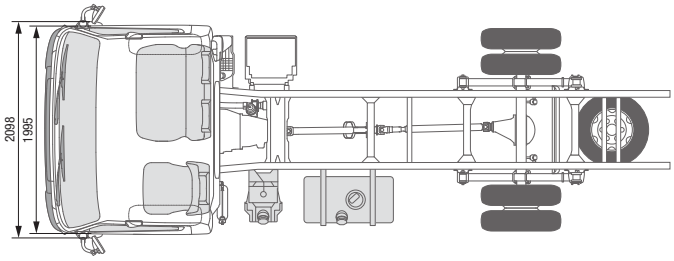

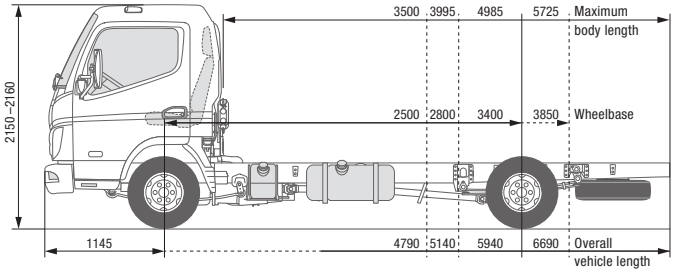

CANTER 3C15 DUONIC® 2.0
LEFT-HAND DRIVE

MODEL / VEHICLE TYPE		3C15			
Cab type / crew		Comfort, single cab / 3			
Model variant		46907211	46907311	46907511	46907711
FUSO model code		FEB01BL3SEUX	FEB01CL3SEUX	FEB01EL3SEUX	FEB01GL3SEUX
DIMENSIONS [MM]					
Wheelbase		2500	2800	3400	3850
Overall length		4790	5140	5940	6690
Cab length		1625			
Width overall		2098			
Cab width		1995			
Height overall		2160	2155	2155	2150
Track width	Front / rear	1665 / 1500			
Frame height (at end of frame)		745		765	770
Ground clearance		165			
Cab to rear axle		1975	2275	2875	3325
Cab to end of frame		3120	3470	4270	5020
Maximum body length**		3500	3995	4985	5725
Frame width		750			
Front overhang		1145			
Rear overhang		1145	1195	1395	1695
Front axle to front of body		625			
Recommended distance cab to body		100			
WEIGHTS [KG]					
Empty weight*		2060	2070	2095	2110
	Front* / rear*	1525 / 535	1540 / 530	1550 / 545	1565 / 545
Minimum vehicle weight		2310	2335	2350	2370
Gross vehicle weight / gross combination weight		3500 / 7000			
Axle loads*	Front / rear	1950 / 2500			
Towed weight	Braked / unbraked	3500 / 750			
Chassis load bearing capacity*		1440	1430	1405	1390
CALCULATED OUTPUT					
Maximum speed	km/h	137			
Minimum turning circle [m]	Kerb to kerb	8.6	9.4	11.2	12.4
	Wall to wall	10.0	11.0	12.6	14.0

* The weight refers to the base vehicle (European series, including coolant, oil, 90% fuel, tyre sealant, tools and driver with 75 kg) without optional equipment. If any optional equipment is added, the weight changes accordingly. ** Calculated maximum value which should be checked depending on the body and application.
Subject to change without notice. All data is approximate. The illustrations may contain accessories and items of optional equipment which are not part of the standard specification. The data sheet may contain product types and support services not available in certain countries.

FUSO – A Daimler Truck Group Brand

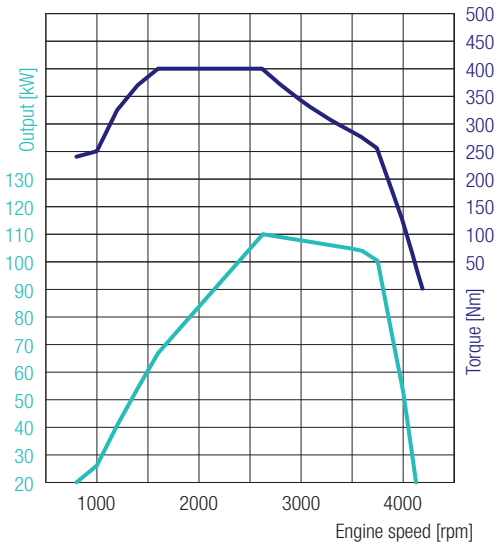

CANTER 3C15 DUONIC® 2.0
LEFT-HAND DRIVE

4P10 – 110 kW (150 PS)
400 Nm@1600 rpm
110 kW@2626 rpm

ENGINE (EURO VI)			
Type		Water-cooled four-stroke diesel engine with turbocharger, intercooler and direct injection	
No. of cylinders		4/in-line	
Capacity		2998 cm³	
Peak output		110 kW (150 hp) / 2626 rpm	
Rated torque		400 Nm / 1600 rpm	
Diesel particulate filter		Service life approx. 300,000 km	
Alternator		Alternating current 12 V, 140 A	
Exhaust gas aftertreatment		DPF + SCR	
PTO (optional)	Type	31 kW with flange	31 kW for directly connected pumps
	Torque at peak output [Nm]:	196 Nm	
	Gear ratios	1:0.655	1:0.651
	Engine speed at peak output	1500 rpm	
POWERTRAIN			
Transmission	Model	DUONIC® 2.0: Automated transmission with dual clutch, 6 forward speeds and 1 reverse gear	
	Gear ratio	5.397 / 3.788 / 2.310 / 1.474 / 1.000 / 0.701 / reverse 5.397	
Rear axle gear ratio	Ratio	4.111	
CHASSIS			
Front axle / rear axle	Model	F100T / R015T	
	Load-bearing capacity front/rear	1950 kg / 2500 kg	
Tyres		195/75R16C 107/105 R	
		Twin tyres at rear	
Wheel		16 x 5 JK - 110	
Steering		Left-hand drive	
		Rack-and-pinion steering with power assist, tilting telescopic steering column with steering-wheel lock	
Brake	Service brake	Hydraulic with vacuum power assist, dual-circuit with load-dependent brake proportioning valve at rear wheels	
	Front / rear	Disc brake (217 × 24)	
	Parking brake	Mechanical expanding brake on drive shaft at rear of transmission	
	Auxiliary brake	Exhaust brake (50 kW)	
Suspension	Front / rear	Independent wheel suspension (coil spring) with shock absorber / semi-elliptic leaf spring with shock absorber and stabiliser	
Frame	Type	Ladder-type frame with reinforcements and crossmembers	
Fuel tank capacity		70 litres	
Electrical system	Batteries	12 V (100 Ah - 760 A(EN))	

FUSO – A Daimler Truck Group Brand

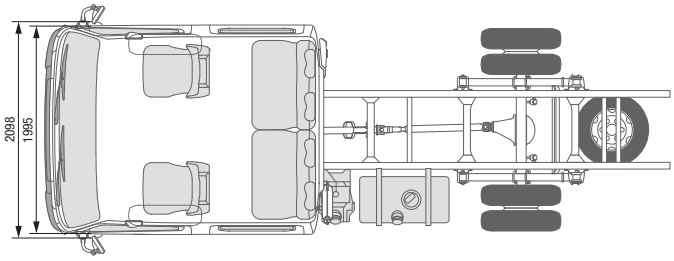

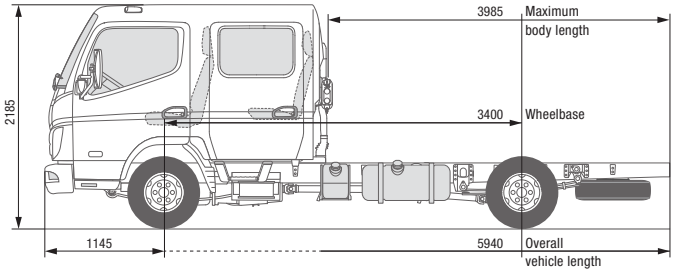

CANTER 3C15D
LEFT-HAND DRIVE

MODEL / VEHICLE TYPE		3C15D
Cab type / crew		Comfort, crew cab / 6
Model variant		46906513
FUSO model code		FEB01EL4WEUX
DIMENSIONS [MM]		
Wheelbase		3400
Overall length		5940
Cab length		2625
Width overall		2098
Cab width		1995
Height overall		2185
Track width	Front / rear	1665 / 1500
Frame height (at end of frame)		755
Ground clearance		165
Cab to rear axle		1875
Cab to end of frame		3270
Maximum body length**		3985
Frame width		750
Front overhang		1145
Rear overhang		1395
Front axle to front of body		1625
Recommended distance cab to body		100
WEIGHTS [KG]		
Empty weight*		2295
	Front* / rear*	1675 / 620
Minimum vehicle weight		2535
Gross vehicle weight / gross combination weight		3500 / 7000
Axle loads*	Front / rear	1950 / 2500
Towed weight	Braked / unbraked	3500 / 750
Chassis load bearing capacity*		1205
CALCULATED OUTPUT		
Maximum speed	km/h	136
Minimum turning circle [m]	Kerb to kerb	11.2
	Wall to wall	12.6

* The weight refers to the base vehicle (European series, including coolant, oil, 90% fuel, tyre sealant, tools and driver with 75 kg) without optional equipment. If any optional equipment is added, the weight changes accordingly. ** Calculated maximum value which should be checked depending on the body and application.
Subject to change without notice. All data is approximate. The illustrations may contain accessories and items of optional equipment which are not part of the standard specification. The data sheet may contain product types and support services not available in certain countries.

FUSO – A Daimler Truck Group Brand

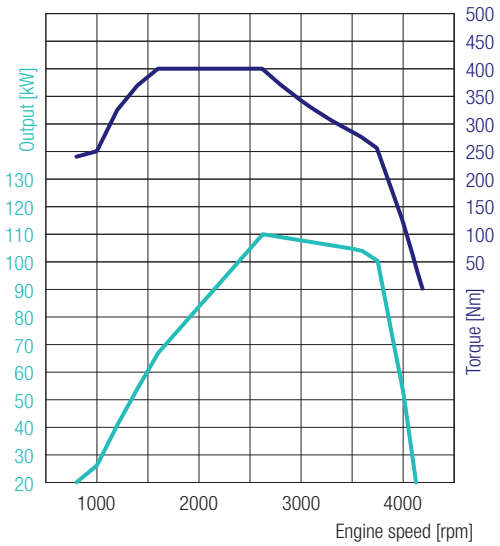

CANTER 3C15D
LEFT-HAND DRIVE

4P10 – 110 kW (150 PS)
400 Nm@1600 rpm
110 kW@2626 rpm

ENGINE (EURO VI)			
Type		Water-cooled four-stroke diesel engine with turbocharger, intercooler and direct injection	
No. of cylinders		4/in-line	
Capacity		2998 cm³	
Peak output		110 kW (150 hp) / 2626 rpm	
Rated torque		400 Nm / 1600 rpm	
Diesel particulate filter		Service life approx. 300,000 km	
Alternator		Alternating current 12 V, 140 A	
Exhaust gas aftertreatment		DPF + SCR	
PTO (optional)	Type	31 kW with flange	31 kW for directly connected pumps
	Torque at peak output [Nm]:	196 Nm	
	Gear ratios	1:0.655	1:0.651
	Engine speed at peak output	1500 rpm	
POWERTRAIN			
Transmission	Model	Manual gearbox, 5 forward gears, 1 reverse gear	
	Gear ratio	5.494 / 3.193 / 1.689 / 1.000 / 0.723 / reverse 5.494	
Rear axle gear ratio	Ratio	4.111	
CHASSIS			
Front axle / rear axle	Model	F100T / R015T	
	Load-bearing capacity front/rear	1950 kg / 2500 kg	
Tyres		195/75R16C 107/105 R	
		Twin tyres at rear	
Wheel		16 x 5 JK - 110	
Steering		Left-hand drive	
		Rack-and-pinion steering with power assist, tilting telescopic steering column with steering-wheel lock	
Brake	Service brake	Hydraulic with vacuum power assist, dual-circuit with load-dependent brake proportioning valve at rear wheels	
	Front / rear	Disc brake (217 × 24)	
	Parking brake	Mechanical expanding brake on drive shaft at rear of transmission	
	Auxiliary brake	Exhaust brake (50 kW)	
Suspension	Front / rear	Independent wheel suspension (coil spring) with shock absorber / semi-elliptic leaf spring with shock absorber and stabiliser	
Frame	Type	Ladder-type frame with reinforcements and crossmembers	
Fuel tank capacity		70 litres	
Electrical system	Batteries	12 V (100 Ah - 760 A(EN))	

FUSO – A Daimler Truck Group Brand

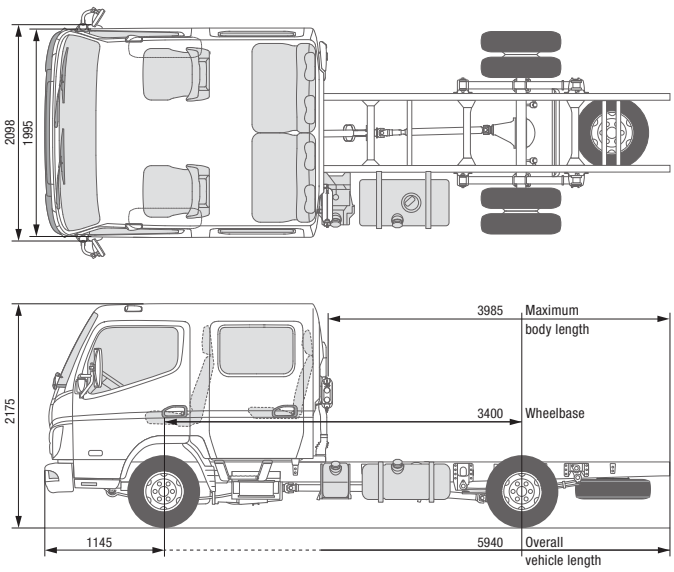

CANTER 3C15D DUONIC® 2.0
LEFT-HAND DRIVE

MODEL / VEHICLE TYPE		3C15D
Cab type / crew		Comfort, crew cab / 6
Model variant		46907513
FUSO model code		FEB01EL3WEUX
DIMENSIONS [MM]		
Wheelbase		3400
Overall length		5940
Cab length		2625
Width overall		2098
Cab width		1995
Height overall		2175
Track width	Front / rear	1665 / 1500
Frame height (at end of frame)		760
Ground clearance		165
Cab to rear axle		1875
Cab to end of frame		3270
Maximum body length**		3985
Frame width		750
Front overhang		1145
Rear overhang		1395
Front axle to front of body		1625
Recommended distance cab to body		100
WEIGHTS [KG]		
Empty weight*		2315
	Front* / rear*	1690 / 625
Minimum vehicle weight		2565
Gross vehicle weight / gross combination weight		3500 / 7000
Axle loads*	Front / rear	1950 / 2500
Towed weight	Braked / unbraked	3500 / 750
Chassis load bearing capacity*		1185
CALCULATED OUTPUT		
Maximum speed	km/h	137
Minimum turning circle [m]	Kerb to kerb	11.2
	Wall to wall	12.6

* The weight refers to the base vehicle (European series, including coolant, oil, 90% fuel, tyre sealant, tools and driver with 75 kg) without optional equipment. If any optional equipment is added, the weight changes accordingly. ** Calculated maximum value which should be checked depending on the body and application.
Subject to change without notice. All data is approximate. The illustrations may contain accessories and items of optional equipment which are not part of the standard specification. The data sheet may contain product types and support services not available in certain countries.

FUSO – A Daimler Truck Group Brand

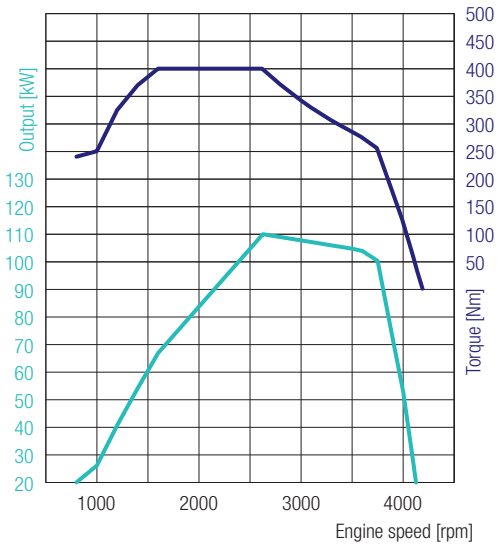

CANTER 3C15D DUONIC® 2.0
LEFT-HAND DRIVE

4P10 – 110 kW (150 PS)
400 Nm@1600 rpm
110 kW@2626 rpm

ENGINE (EURO VI)			
Type		Water-cooled four-stroke diesel engine with turbocharger, intercooler and direct injection	
No. of cylinders		4/in-line	
Capacity		2998 cm³	
Peak output		110 kW (150 hp) / 2626 rpm	
Rated torque		400 Nm / 1600 rpm	
Diesel particulate filter		Service life approx. 300,000 km	
Alternator		Alternating current 12 V, 140 A	
Exhaust gas aftertreatment		DPF + SCR	
PTO (optional)	Type	31 kW with flange	31 kW for directly connected pumps
	Torque at peak output [Nm]:	196 Nm	
	Gear ratios	1:0.655	1:0.651
	Engine speed at peak output	1500 rpm	

POWERTRAIN		
Transmission	Model	DUONIC® 2.0: Automated transmission with dual clutch, 6 forward speeds and 1 reverse gear
	Gear ratio	5.397 / 3.788 / 2.310 / 1.474 / 1.000 / 0.701 / reverse 5.397
Rear axle gear ratio	Ratio	4.444

CHASSIS		
Front axle / rear axle	Model	F100T / R015T
	Load-bearing capacity front/rear	1950 kg / 2500 kg
Tyres		195/75R16C 107/105 R
		Twin tyres at rear
Wheel		16 x 5 JK - 110
Steering		Left-hand drive
		Rack-and-pinion steering with power assist, tilting telescopic steering column with steering-wheel lock
Brake	Service brake	Hydraulic with vacuum power assist, dual-circuit with load-dependent brake proportioning valve at rear wheels
	Front / rear	Disc brake (217 × 24)
	Parking brake	Mechanical expanding brake on drive shaft at rear of transmission
	Auxiliary brake	Exhaust brake (50 kW)
Suspension	Front / rear	Independent wheel suspension (coil spring) with shock absorber / semi-elliptic leaf spring with shock absorber and stabiliser
Frame	Type	Ladder-type frame with reinforcements and crossmembers
Fuel tank capacity		70 litres
Electrical system	Batteries	12 V (100 Ah - 760 A(EN))

FUSO – A Daimler Truck Group Brand

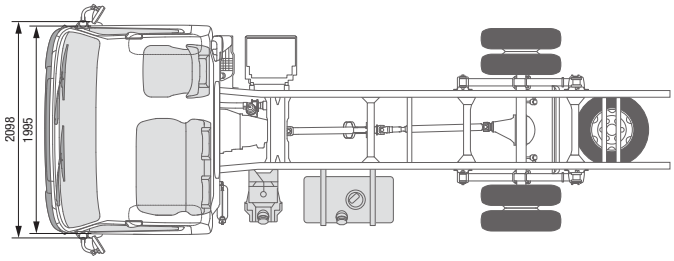

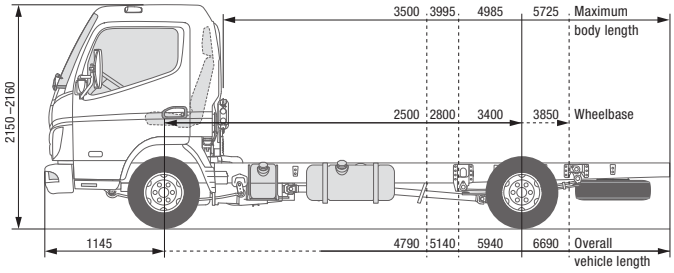

CANTER 3C15 DUONIC® 2.0
RIGHT-HAND DRIVE

MODEL / VEHICLE TYPE		3C15			
Cab type / crew		Comfort, single cab / 3			
Model variant		46907221	46907321	46907521	46907721
FUSO model code		FEB01BR3SEUX	FEB01CR3SEUX	FEB01ER3SEUX	FEB01GR3SEUX
DIMENSIONS [MM]					
Wheelbase		2500	2800	3400	3850
Overall length		4790	5140	5940	6690
Cab length		1625			
Width overall		2098			
Cab width		1995			
Height overall		2160	2155	2155	2150
Track width	Front / rear	1665 / 1500			
Frame height (at end of frame)		745		765	770
Ground clearance		165			
Cab to rear axle		1975	2275	2875	3325
Cab to end of frame		3120	3470	4270	5020
Maximum body length**		3500	3995	4985	5725
Frame width		750			
Front overhang		1145			
Rear overhang		1145	1195	1395	1695
Front axle to front of body		625			
Recommended distance cab to body		100			
WEIGHTS [KG]					
Empty weight*		2060	2070	2095	2110
	Front* / rear*	1525 / 535	1540 / 530	1550 / 545	1565 / 545
Minimum vehicle weight		2310	2335	2350	2370
Gross vehicle weight / gross combination weight		3500 / 7000			
Axle loads*	Front / rear	1950 / 2500			
Towed weight	Braked / unbraked	3500 / 750			
Chassis load bearing capacity*		1440	1430	1405	1390
CALCULATED OUTPUT					
Maximum speed	km/h	139			
Minimum turning circle [m]	Kerb to kerb	8.6	9.4	11.2	12.4
	Wall to wall	10.0	11.0	12.6	14.0

* The weight refers to the base vehicle (European series, including coolant, oil, 90% fuel, tyre sealant, tools and driver with 75 kg) without optional equipment. If any optional equipment is added, the weight changes accordingly. ** Calculated maximum value which should be checked depending on the body and application.
Subject to change without notice. All data is approximate. The illustrations may contain accessories and items of optional equipment which are not part of the standard specification. The data sheet may contain product types and support services not available in certain countries.

FUSO – A Daimler Truck Group Brand

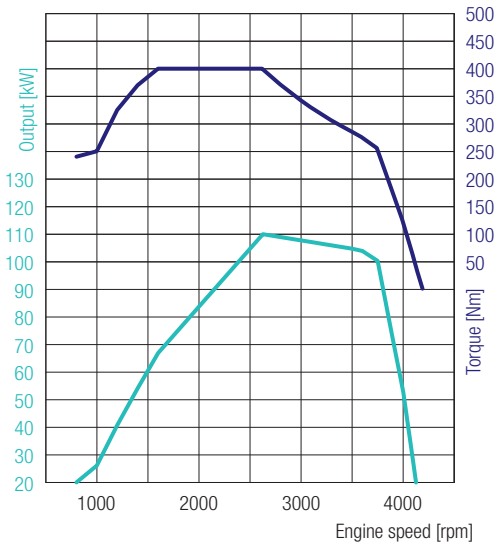

CANTER 3C15 DUONIC® 2.0
RIGHT-HAND DRIVE

4P10 – 110 kW (150 PS)
400 Nm@1600 rpm
110 kW@2626 rpm

ENGINE (EURO VI)			
Type		Water-cooled four-stroke diesel engine with turbocharger, intercooler and direct injection	
No. of cylinders		4/in-line	
Capacity		2998 cm³	
Peak output		110 kW (150 hp) / 2626 rpm	
Rated torque		400 Nm / 1600 rpm	
Diesel particulate filter		Service life approx. 300,000 km	
Alternator		Alternating current 12 V, 140 A	
Exhaust gas aftertreatment		DPF + SCR	
PTO (optional)	Type	31 kW with flange	31 kW for directly connected pumps
	Torque at peak output [Nm]:	196 Nm	
	Gear ratios	1:0.655	1:0.651
	Engine speed at peak output	1500 rpm	
POWERTRAIN			
Transmission	Model	DUONIC® 2.0: Automated transmission with dual clutch, 6 forward speeds and 1 reverse gear	
	Gear ratio	5.397 / 3.788 / 2.310 / 1.474 / 1.000 / 0.701 / reverse 5.397	
Rear axle gear ratio	Ratio	4.111	
CHASSIS			
Front axle / rear axle	Model	F100T / R015T	
	Load-bearing capacity front/rear	1950 kg / 2500 kg	
Tyres		195/75R16C 107/105 R	
		Twin tyres at rear	
Wheel		16 x 5 JK - 110	
Steering		Right-hand drive	
		Rack-and-pinion steering with power assist, tilting telescopic steering column with steering-wheel lock	
Brake	Service brake	Hydraulic with vacuum power assist, dual-circuit with load-dependent brake proportioning valve at rear wheels	
	Front / rear	Disc brake (217 × 24)	
	Parking brake	Mechanical expanding brake on drive shaft at rear of transmission	
	Auxiliary brake	Exhaust brake (50 kW)	
Suspension	Front / rear	Independent wheel suspension (coil spring) with shock absorber / semi-elliptic leaf spring with shock absorber and stabiliser	
Frame	Type	Ladder-type frame with reinforcements and crossmembers	
Fuel tank capacity		70 litres	
Electrical system	Batteries	12 V (100 Ah - 760 A(EN))	

FUSO – A Daimler Truck Group Brand

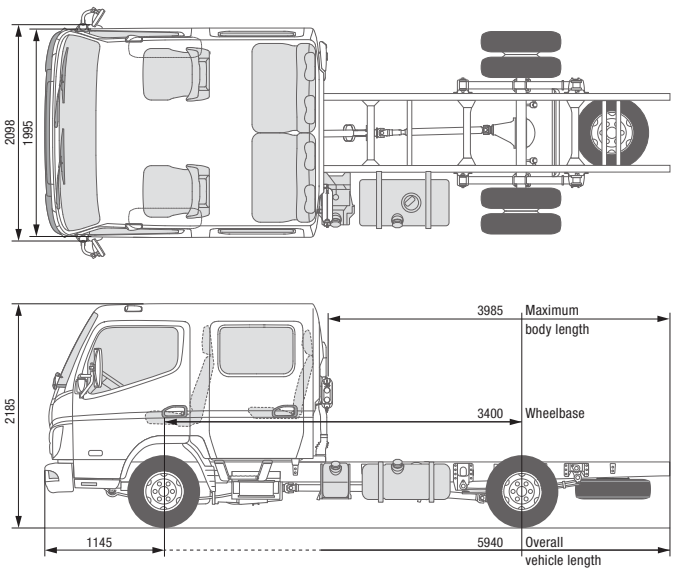

CANTER 3C15D
RIGHT-HAND DRIVE

MODEL / VEHICLE TYPE		3C15D
Cab type / crew		Comfort, crew cab / 6
Model variant		46906523
FUSO model code		FEB01ER4WEUX
DIMENSIONS [MM]		
Wheelbase		3400
Overall length		5940
Cab length		2625
Width overall		2098
Cab width		1995
Height overall		2185
Track width	Front / rear	1665 / 1500
Frame height (at end of frame)		755
Ground clearance		165
Cab to rear axle		1875
Cab to end of frame		3270
Maximum body length**		3985
Frame width		750
Front overhang		1145
Rear overhang		1395
Front axle to front of body		1625
Recommended distance cab to body		100
WEIGHTS [KG]		
Empty weight*		2295
	Front* / rear*	1675 / 620
Minimum vehicle weight		2535
Gross vehicle weight / gross combination weight		3500 / 7000
Axle loads*	Front / rear	1950 / 2500
Towed weight	Braked / unbraked	3500 / 750
Chassis load bearing capacity*		1205
CALCULATED OUTPUT		
Maximum speed	km/h	136
Minimum turning circle [m]	Kerb to kerb	11.2
	Wall to wall	12.6

* The weight refers to the base vehicle (European series, including coolant, oil, 90% fuel, tyre sealant, tools and driver with 75 kg) without optional equipment. If any optional equipment is added, the weight changes accordingly. ** Calculated maximum value which should be checked depending on the body and application.
Subject to change without notice. All data is approximate. The illustrations may contain accessories and items of optional equipment which are not part of the standard specification. The data sheet may contain product types and support services not available in certain countries.

FUSO – A Daimler Truck Group Brand

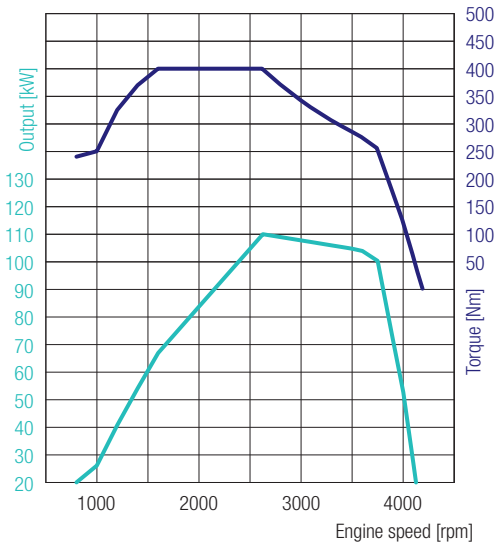

CANTER 3C15D
RIGHT-HAND DRIVE

4P10 – 110 kW (150 PS)
400 Nm@1600 rpm
110 kW@2626 rpm

ENGINE (EURO VI)			
Type		Water-cooled four-stroke diesel engine with turbocharger, intercooler and direct injection	
No. of cylinders		4/in-line	
Capacity		2998 cm^3	
Peak output		110 kW (150 hp) / 2626 rpm	
Rated torque		400 Nm / 1600 rpm	
Diesel particulate filter		Service life approx. 300,000 km	
Alternator		Alternating current 12 V, 140 A	
Exhaust gas aftertreatment		DPF + SCR	
PTO (optional)	Type	31 kW with flange	31 kW for directly connected pumps
	Torque at peak output [Nm]:	196 Nm	
	Gear ratios	1:0.655	1:0.651
	Engine speed at peak output	1500 rpm	
POWERTRAIN			
Transmission	Model	Manual gearbox, 5 forward gears, 1 reverse gear	
	Gear ratio	5.494 / 3.193 / 1.689 / 1.000 / 0.723 / reverse 5.494	
Rear axle gear ratio	Ratio	4.111	
CHASSIS			
Front axle / rear axle	Model	F100T / R015T	
	Load-bearing capacity front/rear	1950 kg / 2500 kg	
Tyres		195/75R16C 107/105 R	
		Twin tyres at rear	
Wheel		16 x 5 JK - 110	
Steering		Right-hand drive	
		Rack-and-pinion steering with power assist, tilting telescopic steering column with steering-wheel lock	
Brake	Service brake	Hydraulic with vacuum power assist, dual-circuit with load-dependent brake proportioning valve at rear wheels	
	Front / rear	Disc brake (217 × 24)	
	Parking brake	Mechanical expanding brake on drive shaft at rear of transmission	
	Auxiliary brake	Exhaust brake (50 kW)	
Suspension	Front / rear	Independent wheel suspension (coil spring) with shock absorber / semi-elliptic leaf spring with shock absorber and stabiliser	
Frame	Type	Ladder-type frame with reinforcements and crossmembers	
Fuel tank capacity		70 litres	
Electrical system	Batteries	12 V (100 Ah - 760 A(EN))	

FUSO – A Daimler Truck Group Brand

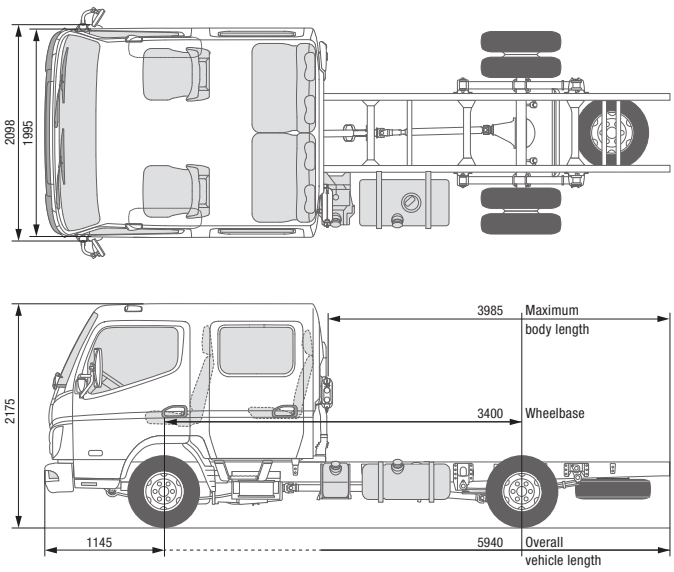

CANTER 3C15D DUONIC® 2.0
RIGHT-HAND DRIVE

MODEL / VEHICLE TYPE		3C15D
Cab type / crew		Comfort, crew cab / 6
Model variant		46907523
FUSO model code		FEB01ER3WEUX
DIMENSIONS [MM]		
Wheelbase		3400
Overall length		5940
Cab length		2625
Width overall		2098
Cab width		1995
Height overall		2175
Track width	Front / rear	1665 / 1500
Frame height (at end of frame)		760
Ground clearance		165
Cab to rear axle		1875
Cab to end of frame		3270
Maximum body length**		3985
Frame width		750
Front overhang		1145
Rear overhang		1395
Front axle to front of body		1625
Recommended distance cab to body		100
WEIGHTS [KG]		
Empty weight*		2315
	Front* / rear*	1690 / 625
Minimum vehicle weight		2565
Gross vehicle weight / gross combination weight		3500 / 7000
Axle loads*	Front / rear	1950 / 2500
Towed weight	Braked / unbraked	3500 / 750
Chassis load bearing capacity*		1185
CALCULATED OUTPUT		
Maximum speed	km/h	139
Minimum turning circle [m]	Kerb to kerb	11.2
	Wall to wall	12.6

* The weight refers to the base vehicle (European series, including coolant, oil, 90% fuel, tyre sealant, tools and driver with 75 kg) without optional equipment. If any optional equipment is added, the weight changes accordingly. ** Calculated maximum value which should be checked depending on the body and application.
Subject to change without notice. All data is approximate. The illustrations may contain accessories and items of optional equipment which are not part of the standard specification. The data sheet may contain product types and support services not available in certain countries.

FUSO – A Daimler Truck Group Brand

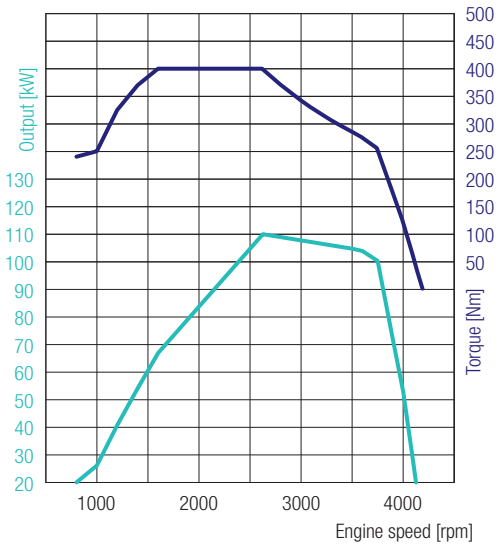

CANTER 3C15D DUONIC® 2.0
RIGHT-HAND DRIVE

4P10 – 110 kW (150 PS)
400 Nm@1600 rpm
110 kW@2626 rpm

ENGINE (EURO VI)			
Type		Water-cooled four-stroke diesel engine with turbocharger, intercooler and direct injection	
No. of cylinders		4/in-line	
Capacity		2998 cm³	
Peak output		110 kW (150 hp) / 2626 rpm	
Rated torque		400 Nm / 1600 rpm	
Diesel particulate filter		Service life approx. 300,000 km	
Alternator		Alternating current 12 V, 140 A	
Exhaust gas aftertreatment		DPF + SCR	
PTO (optional)	Type	31 kW with flange	31 kW for directly connected pumps
	Torque at peak output [Nm]:	196 Nm	
	Gear ratios	1:0.655	1:0.651
	Engine speed at peak output	1500 rpm	
POWERTRAIN			
Transmission	Model	DUONIC® 2.0: Automated transmission with dual clutch, 6 forward speeds and 1 reverse gear	
	Gear ratio	5.397 / 3.788 / 2.310 / 1.474 / 1.000 / 0.701 / reverse 5.397	
Rear axle gear ratio	Ratio	4.444	
CHASSIS			
Front axle / rear axle	Model	F100T / R015T	
	Load-bearing capacity front/rear	1950 kg / 2500 kg	
Tyres		195/75R16C 107/105 R	
		Twin tyres at rear	
Wheel		16 x 5 JK - 110	
Steering		Right-hand drive	
		Rack-and-pinion steering with power assist, tilting telescopic steering column with steering-wheel lock	
Brake	Service brake	Hydraulic with vacuum power assist, dual-circuit with load-dependent brake proportioning valve at rear wheels	
	Front / rear	Disc brake (217 × 24)	
	Parking brake	Mechanical expanding brake on drive shaft at rear of transmission	
	Auxiliary brake	Exhaust brake (50 kW)	
Suspension	Front / rear	Independent wheel suspension (coil spring) with shock absorber / semi-elliptic leaf spring with shock absorber and stabiliser	
Frame	Type	Ladder-type frame with reinforcements and crossmembers	
Fuel tank capacity		70 litres	
Electrical system	Batteries	12 V (100 Ah - 760 A(EN))	

FUSO – A Daimler Truck Group Brand

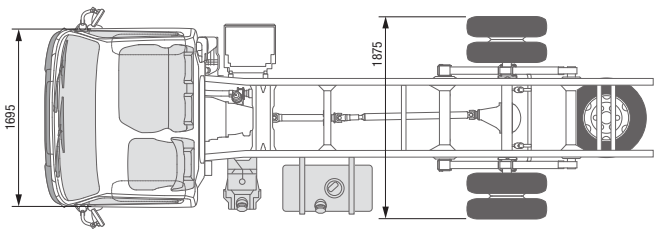

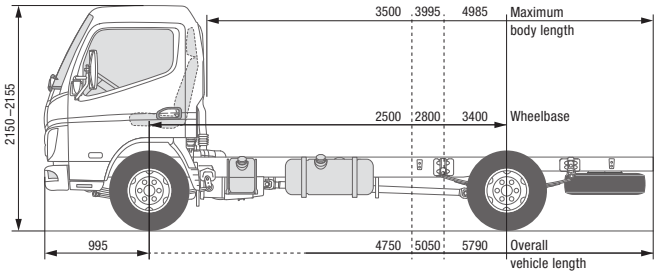

CANTER 6S15
LEFT-HAND DRIVE

MODEL / VEHICLE TYPE		6S15		
Cab type / crew			Standard, single cab / 3	
Model variant		46920212	46920312	46920512
FUSO model code		FEA51BL4SEUB	FEA51CL4SEUB	FEA51EL4SEUB
DIMENSIONS [MM]				
Wheelbase		2500	2800	3400
Overall length		4640	4990	5790
Cab length			1510	
Width overall			1875	
Cab width			1695	
Height overall		2155	2155	2150
Track width	Front / rear		1390 / 1435	
Frame height (at end of frame)		790	800	785
Ground clearance			165	
Cab to rear axle		1975	2275	2875
Cab to end of frame		3230	3530	4270
Maximum body length**		3500	3995	4985
Frame width			700	
Front overhang			995	
Rear overhang		1145	1195	1395
Front axle to front of body			625	
Recommended distance cab to body			100	
WEIGHTS [KG]				
Empty weight*		2255	2270	2300
	Front* / rear*	1540 / 715	1535 / 735	1550 / 750
Gross vehicle weight / gross combination weight			6000 / 9000	
Axle loads*	Front / rear		2300 / 4360	
Towed weight	Braked / unbraked		3000 / 750	
Chassis load bearing capacity*		3745	3730	3700
CALCULATED OUTPUT				
Maximum speed	km/h		141	
Minimum turning circle [m]	Kerb to kerb	10.2	11.4	13.4
	Wall to wall	11.4	12.4	14.6

* The weight refers to the base vehicle (European series, including coolant, oil, 90% fuel, tyre sealant, tools and driver with 75 kg) without optional equipment. If any optional equipment is added, the weight changes accordingly. ** Calculated maximum value which should be checked depending on the body and application.
Subject to change without notice. All data is approximate. The illustrations may contain accessories and items of optional equipment which are not part of the standard specification. The data sheet may contain product types and support services not available in certain countries.

FUSO – A Daimler Truck Group Brand

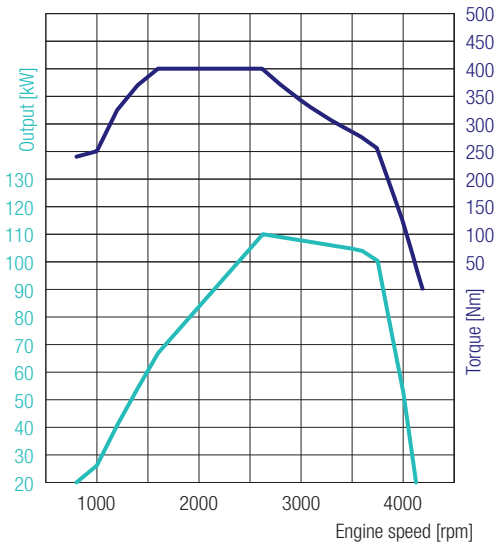

CANTER 6S15
LEFT-HAND DRIVE

4P10 – 110 kW (150 PS)
400 Nm@1600 rpm
110 kW@2626 rpm

ENGINE (EURO VI)			
Type		Water-cooled four-stroke diesel engine with turbocharger, intercooler and direct injection	
No. of cylinders		4/in-line	
Capacity		2998 cm^3	
Peak output		110 kW (150 hp) / 2626 rpm	
Rated torque		400 Nm / 1600 rpm	
Diesel particulate filter		Service life approx. 300,000 km	
Alternator		Alternating current 12 V, 140 A	
Exhaust gas aftertreatment		DPF + SCR	
PTO (optional)	Type	31 kW with flange	31 kW for directly connected pumps
	Torque at peak output [Nm]:	196 Nm	
	Gear ratios	1:0.644	1:0.638
	Engine speed at peak output	1500 rpm	
POWERTRAIN			
Transmission	Model	Manual gearbox, 5 forward gears, 1 reverse gear	
	Gear ratio	5.494 / 3.193 / 1.689 / 1.000 / 0.723 / reverse 5.494	
Rear axle gear ratio	Ratio	4.444	
CHASSIS			
Front axle / rear axle	Model	F200T / R030T	
	Load-bearing capacity front/rear	2300 kg / 4360 kg	
Tyres		205/75R16C 113/111 Q	
		Twin tyres at rear	
Wheel		16 x 5 1/2K - 115 - 8t - 5 wheel bolts	
Steering		Left-hand drive	
		Recirculating-ball steering with power assist, tilting telescopic steering column with steering-wheel lock	
Brake	Service brake	Hydraulic with vacuum power assist, dual-circuit with load-dependent brake proportioning valve at rear wheels	
	Front / rear	Disc brake (235 × 40)	
	Parking brake	Mechanical expanding brake on drive shaft at rear of transmission	
	Auxiliary brake	Exhaust brake (50 kW)	
Suspension	Front / rear	Semi-elliptic leaf spring with shock absorber and stabiliser	
Frame	Type	Ladder-type frame with reinforcements and crossmembers	
Fuel tank capacity		70 litres	
Electrical system	Batteries	12 V (100 Ah - 760 A(EN))	

FUSO – A Daimler Truck Group Brand

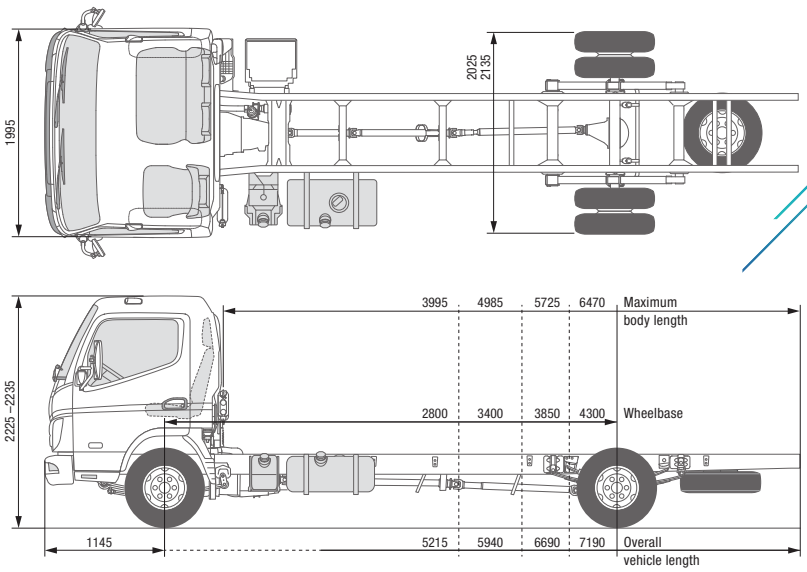

CANTER 7C15
LEFT-HAND DRIVE

MODEL / VEHICLE TYPE		7C15			
Cab type / crew		Comfort, single cab / 3			
Model variant		46922312	46922512	46922712	46922812
FUSO model code		FEB71CL4SEUB	FEB71EL4SEUB	FEB71GL4SEUB	FEC71HL4SEUB
DIMENSIONS [MM]					
Wheelbase		2800	3400	3850	4300
Overall length		5140	5940	6690	7190
Cab length		1625			
Width overall		2025			2135
Cab width		1995			
Height overall		2225	2225	2225	2235
Track width	Front / rear	1665 / 1560			1665 / 1670
Frame height (at end of frame)		845			840
Ground clearance		185			
Cab to rear axle		2275	2875	3325	3775
Cab to end of frame		3545	4270	5020	5520
Maximum body length**		3995	4985	5725	6470
Frame width		750			850
Front overhang		1145			
Rear overhang		1195	1395	1695	1745
Front axle to front of body		625			
Recommended distance cab to body		100			
WEIGHTS [KG]					
Empty weight*		2560	2595	2615	2655
	Front* / rear*	1680 / 880	1695 / 900	1700 / 915	1710 / 945
Gross vehicle weight / gross combination weight		7490 / 10990			
Axle loads*	Front / rear	3100 / 5800	3100 / 5800	3100 / 5740	3100 / 5680
Towed weight	Braked / unbraked	3500 / 750			
Chassis load bearing capacity*		4940	4905	4885	4845
CALCULATED OUTPUT					
Maximum speed	km/h	130			
Minimum turning circle [m]	Kerb to kerb	10.4	12.2	13.8	15.2
	Wall to wall	11.8	13.8	15.2	16.6

* The weight refers to the base vehicle (European series, including coolant, oil, 90% fuel, tyre sealant, tools and driver with 75 kg) without optional equipment. If any optional equipment is added, the weight changes accordingly. ** Calculated maximum value which should be checked depending on the body and application.
Subject to change without notice. All data is approximate. The illustrations may contain accessories and items of optional equipment which are not part of the standard specification. The data sheet may contain product types and support services not available in certain countries.

FUSO – A Daimler Truck Group Brand

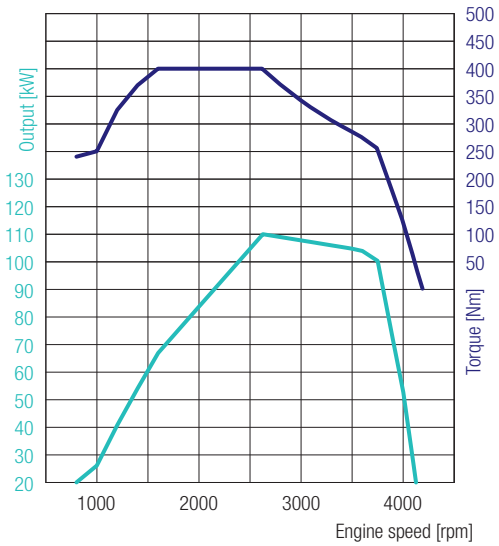

CANTER 7C15
LEFT-HAND DRIVE

4P10 – 110 kW (150 PS)
400 Nm@1600 rpm
110 kW@2626 rpm

ENGINE (EURO VI)				
Type		Water-cooled four-stroke diesel engine with turbocharger, intercooler and direct injection		
No. of cylinders		4/in-line		
Capacity		2998 cm^3		
Peak output		110 kW (150 hp) / 2626 rpm		
Rated torque		400 Nm / 1600 rpm		
Diesel particulate filter		Service life approx. 300,000 km		
Alternator		Alternating current 12 V, 140 A		
Exhaust gas aftertreatment		SCR + DPF		
PTO (optional)	Type	31 kW with flange	62 kW with flange	31 kW for directly connected pumps
	Torque at peak output	196 Nm	392 Nm	196 Nm
	Gear ratios	1:0.644	1:0.723	1:0.638
	Engine speed at peak output	1500 rpm		

POWERTRAIN		
Transmission	Model	Manual gearbox, 5 forward gears, 1 reverse gear
	Gear ratio	5.494 / 3.193 / 1.689 / 1.000 / 0.723 / reverse 5.494
Rear axle gear ratio	Ratio	4.875

CHASSIS		
Front axle / rear axle	Model	F350T / R035T
	Load-bearing capacity front/rear	3100/5800 kg (2800 mm); 3100/5800 kg (3400 mm); 3100/5740 kg (3850 mm); 3100/5680 kg (4300 mm)
Tyres		205/75R17.5C 124/122 M
		Twin tyres at rear, tyres with optimised rolling resistance
Wheel		17.5 x 6.00 - 127 - 9t - 6 wheel bolts
Steering		Left-hand drive
		Recirculating-ball steering with power assist, tilting telescopic steering column with steering-wheel lock
Brake	Service brake	Hydraulic with vacuum power assist, dual-circuit with load-dependent brake proportioning valve at rear wheels
	Front / rear	Disc brake (252 × 40)
	Parking brake	Mechanical expanding brake on drive shaft at rear of transmission
	Auxiliary brake	Exhaust brake (50 kW)
Suspension	Front / rear	Semi-elliptic leaf spring with shock absorber and stabiliser
Frame	Type	Ladder-type frame with reinforcements and crossmembers
Fuel tank capacity		100 litres
Electrical system	Batteries	12 V (100 Ah - 760 A(EN))

FUSO – A Daimler Truck Group Brand

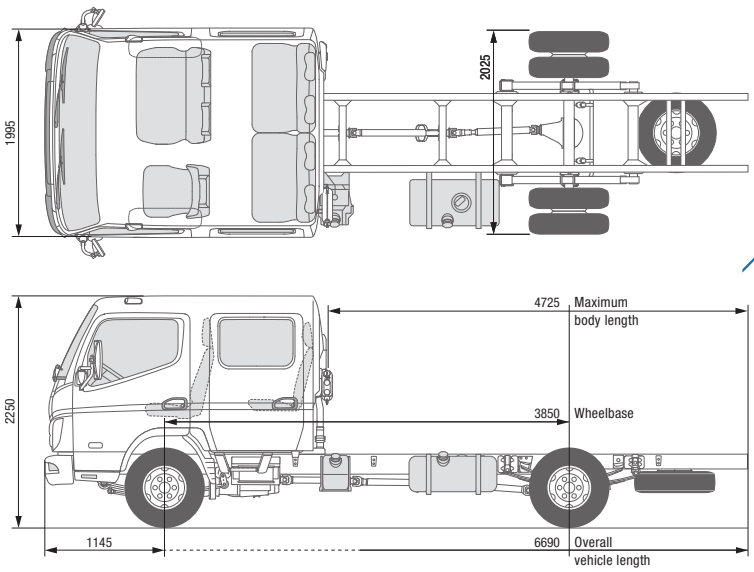

CANTER 7C15D
LEFT-HAND DRIVE

MODEL / VEHICLE TYPE		7C15D
Cab type / crew		Comfort, crew cab / 7
Model variant		46922714
FUSO model code		FEB71GL4WEUB
DIMENSIONS [MM]		
Wheelbase		3850
Overall length		6690
Cab length		2625
Width overall		2025
Cab width		1995
Height overall		2250
Track width	Front / rear	1665 / 1560
Frame height (at end of frame)		845
Ground clearance		185
Cab to rear axle		2325
Cab to end of frame		4020
Maximum body length**		4725
Frame width		750
Front overhang		1145
Rear overhang		1695
Front axle to front of body		1625
Recommended distance cab to body		100
WEIGHTS [KG]		
Empty weight*		2830
	Front* / rear*	1840 / 990
Gross vehicle weight / gross combination weight		7490 / 10990
Axle loads*	Front / rear	3100 / 5740
Towed weight	Braked / unbraked	3500 / 750
Chassis load bearing capacity*		4670
CALCULATED OUTPUT		
Maximum speed	km/h	130
Minimum turning circle [m]	Kerb to kerb	13.8
	Wall to wall	15.2

* The weight refers to the base vehicle (European series, including coolant, oil, 90% fuel, tyre sealant, tools and driver with 75 kg) without optional equipment. If any optional equipment is added, the weight changes accordingly. ** Calculated maximum value which should be checked depending on the body and application.
Subject to change without notice. All data is approximate. The illustrations may contain accessories and items of optional equipment which are not part of the standard specification. The data sheet may contain product types and support services not available in certain countries.

FUSO – A Daimler Truck Group Brand

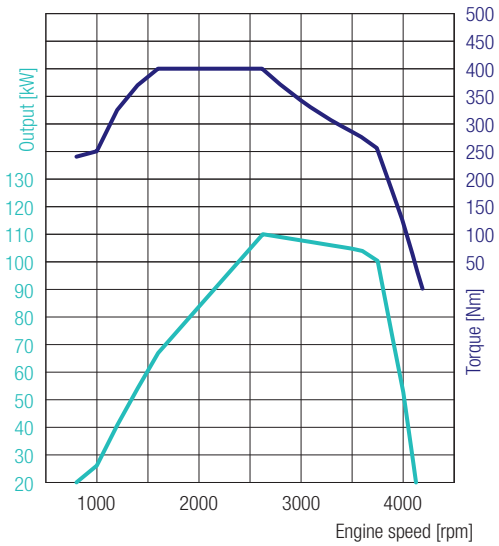

CANTER 7C15D
LEFT-HAND DRIVE

4P10 – 110 kW (150 PS)
400 Nm@1600 rpm
110 kW@2626 rpm

ENGINE (EURO VI)				
Type		Water-cooled four-stroke diesel engine with turbocharger, intercooler and direct injection		
No. of cylinders		4/in-line		
Capacity		2998 cm^3		
Peak output		110 kW (150 hp) / 2626 rpm		
Rated torque		400 Nm / 1600 rpm		
Diesel particulate filter		Service life approx. 300,000 km		
Alternator		Alternating current 12 V, 140 A		
Exhaust gas aftertreatment		SCR + DPF		
PTO (optional)	Type	31 kW with flange	62 kW with flange	31 kW for directly connected pumps
	Torque at peak output	196 Nm	392 Nm	196 Nm
	Gear ratios	1:0.644	1:0.723	1:0.638
	Engine speed at peak output	1500 rpm		

POWERTRAIN		
Transmission	Model	Manual gearbox, 5 forward gears, 1 reverse gear
	Gear ratio	5.494 / 3.193 / 1.689 / 1.000 / 0.723 / reverse 5.494
Rear axle gear ratio	Ratio	4.875

CHASSIS		
Front axle / rear axle	Model	F350T / R035T
	Load-bearing capacity front/rear	3100 kg / 5740 kg
Tyres		205/75R17.5C 124/122 M
		Twin tyres at rear, tyres with optimised rolling resistance
Wheel		17.5 x 6.00 - 127 - 9t - 6 wheel bolts
Steering		Left-hand drive
		Recirculating-ball steering with power assist, tilting telescopic steering column with steering-wheel lock
Brake	Service brake	Hydraulic with vacuum power assist, dual-circuit with load-dependent brake proportioning valve at rear wheels
	Front / rear	Disc brake (252 × 40)
	Parking brake	Mechanical expanding brake on drive shaft at rear of transmission
	Auxiliary brake	Exhaust brake (50 kW)
Suspension	Front / rear	Semi-elliptic leaf spring with shock absorber and stabiliser
Frame	Type	Ladder-type frame with reinforcements and crossmembers
Fuel tank capacity		100 litres
Electrical system	Batteries	12 V (100 Ah - 760 A(EN))

FUSO – A Daimler Truck Group Brand

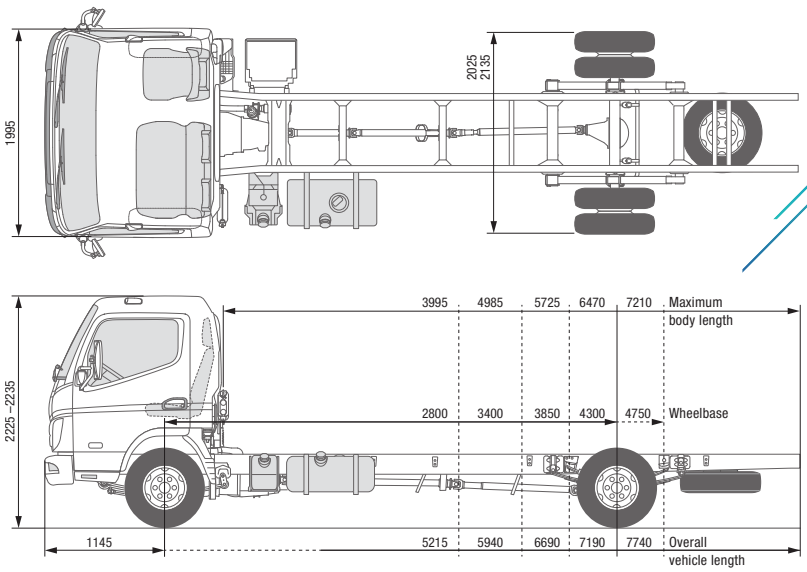

CANTER 7C15
RIGHT-HAND DRIVE

MODEL / VEHICLE TYPE		7C15				
Cab type / crew		Comfort, single cab / 3				
Model variant		46922322	46922522	46922722	46922822	46922925
FUSO model code		FEB71CR4SEUB	FEB71ER4SEUB	FEB71GR4SEUB	FEC71HR4SEUB	FEC71KR4SEUB
DIMENSIONS [MM]						
Wheelbase		2800	3400	3850	4300	4750
Overall length		5140	5940	6690	7190	7740
Cab length		1625				
Width overall		2025			2135	
Cab width		1995				
Height overall		2225	2225	2225	2235	2235
Track width	Front / rear	1665 / 1560			1665 / 1670	
Frame height (at end of frame)		845			840	845
Ground clearance		185				
Cab to rear axle		2275	2875	3325	3775	4225
Cab to end of frame		3545	4270	5020	5520	6070
Maximum body length**		3995	4985	5725	6470	7210
Frame width		750			850	
Front overhang		1145				
Rear overhang		1195	1395	1695	1745	1845
Front axle to front of body		625				
Recommended distance cab to body		100				
WEIGHTS [KG]						
Empty weight*		2560	2595	2615	2655	2675
	Front* / rear*	1680 / 880	1695 / 900	1700 / 915	1710 / 945	1740 / 935
Gross vehicle weight / gross combination weight		7490 / 10990				
Axle loads*	Front / rear	3100 / 5800	3100 / 5800	3100 / 5740	3100 / 5680	3100 / 5640
Towed weight	Braked / unbraked	3500 / 750				
Chassis load bearing capacity*		4940	4905	4885	4845	4825
CALCULATED OUTPUT						
Maximum speed	km/h	130				
Minimum turning circle [m]	Kerb to kerb	10.4	12.2	13.8	15.2	16.6
	Wall to wall	11.8	13.8	15.2	16.6	18.0

* The weight refers to the base vehicle (European series, including coolant, oil, 90% fuel, tyre sealant, tools and driver with 75 kg) without optional equipment. If any optional equipment is added, the weight changes accordingly. ** Calculated maximum value which should be checked depending on the body and application.
Subject to change without notice. All data is approximate. The illustrations may contain accessories and items of optional equipment which are not part of the standard specification. The data sheet may contain product types and support services not available in certain countries.

FUSO – A Daimler Truck Group Brand

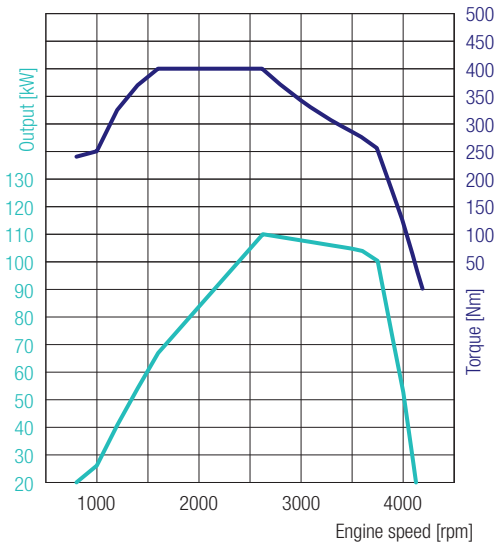

CANTER 7C15
RIGHT-HAND DRIVE

4P10 – 110 kW (150 PS)
400 Nm@1600 rpm
110 kW@2626 rpm

ENGINE (EURO VI)				
Type		Water-cooled four-stroke diesel engine with turbocharger, intercooler and direct injection		
No. of cylinders		4/in-line		
Capacity		2998 cm^3		
Peak output		110 kW (150 hp) / 2626 rpm		
Rated torque		400 Nm / 1600 rpm		
Diesel particulate filter		Service life approx. 300,000 km		
Alternator		Alternating current 12 V, 140 A		
Exhaust gas aftertreatment		SCR + DPF		
PTO (optional)	Type	31 kW with flange	62 kW with flange	31 kW for directly connected pumps
	Torque at peak output	196 Nm	392 Nm	196 Nm
	Gear ratios	1:0.644	1:0.723	1:0.638
	Engine speed at peak output	1500 rpm		

POWERTRAIN		
Transmission	Model	Manual gearbox, 5 forward gears, 1 reverse gear
	Gear ratio	5.494 / 3.193 / 1.689 / 1.000 / 0.723 / reverse 5.494
Rear axle gear ratio	Ratio	4.875

CHASSIS		
Front axle / rear axle	Model	F350T / R035T
	Load-bearing capacity front/rear	3.1/5.8 t (2.80 m); 3.1/5.8 t (3.4 m); 3.1/5.74 t (3.85 m); 3.1/5.68 t (4.3 m); 3.1/5.64 t (4.75 m)
Tyres		205/75R17.5C 124/122 M
		Tyres with optimised rolling resistance
Wheel		17.5 x 6.00 - 127 - 9t - 6 wheel bolts
Steering		Right-hand drive
		Recirculating-ball steering with power assist, tilting telescopic steering column with steering-wheel lock
Brake	Service brake	Hydraulic with vacuum power assist, dual-circuit with load-dependent brake proportioning valve at rear wheels
	Front / rear	Disc brake (252 × 40)
	Parking brake	Mechanical expanding brake on drive shaft at rear of transmission
	Auxiliary brake	Exhaust brake (50 kW)
Suspension	Front / rear	Semi-elliptic leaf spring with shock absorber and stabiliser
Frame	Type	Ladder-type frame with reinforcements and crossmembers
Fuel tank capacity		100 litres
Electrical system	Batteries	12 V (100 Ah - 760 A(EN))

FUSO – A Daimler Truck Group Brand

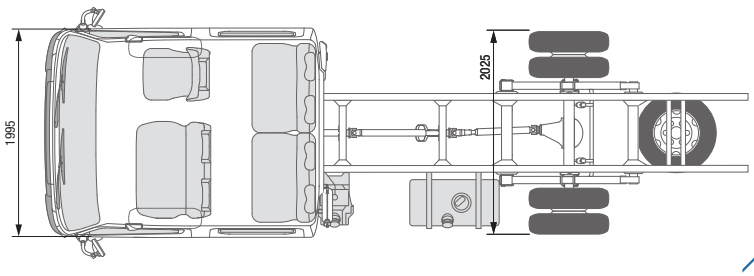

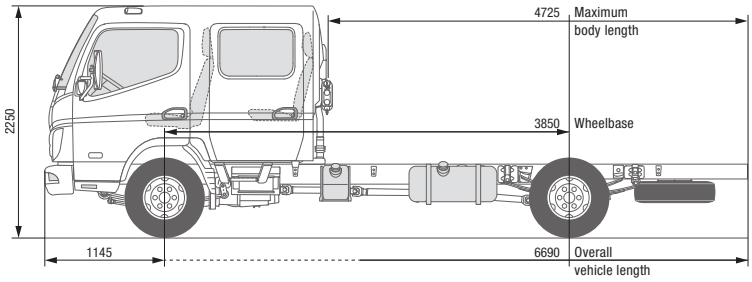

CANTER 7C15D
RIGHT-HAND DRIVE

MODEL / VEHICLE TYPE		7C15D
Cab type / crew		Comfort, crew cab / 7
Model variant		46922724
FUSO model code		FEB71GR4WEUB
DIMENSIONS [MM]		
Wheelbase		3850
Overall length		6690
Cab length		2625
Width overall		2025
Cab width		1995
Height overall		2250
Track width	Front / rear	1665 / 1560
Frame height (at end of frame)		845
Ground clearance		185
Cab to rear axle		2325
Cab to end of frame		4020
Maximum body length**		4725
Frame width		750
Front overhang		1145
Rear overhang		1695
Front axle to front of body		1625
Recommended distance cab to body		100
WEIGHTS [KG]		
Empty weight*		2830
	Front* / rear*	1840 / 990
Gross vehicle weight / gross combination weight		7490 / 10990
Axle loads*	Front / rear	3100 / 5740
Towed weight	Braked / unbraked	3500 / 750
Chassis load bearing capacity*		4670
CALCULATED OUTPUT		
Maximum speed	km/h	130
Minimum turning circle [m]	Kerb to kerb	13.8
	Wall to wall	15.2

* The weight refers to the base vehicle (European series, including coolant, oil, 90% fuel, tyre sealant, tools and driver with 75 kg) without optional equipment. If any optional equipment is added, the weight changes accordingly. ** Calculated maximum value which should be checked depending on the body and application.
Subject to change without notice. All data is approximate. The illustrations may contain accessories and items of optional equipment which are not part of the standard specification. The data sheet may contain product types and support services not available in certain countries.

FUSO – A Daimler Truck Group Brand

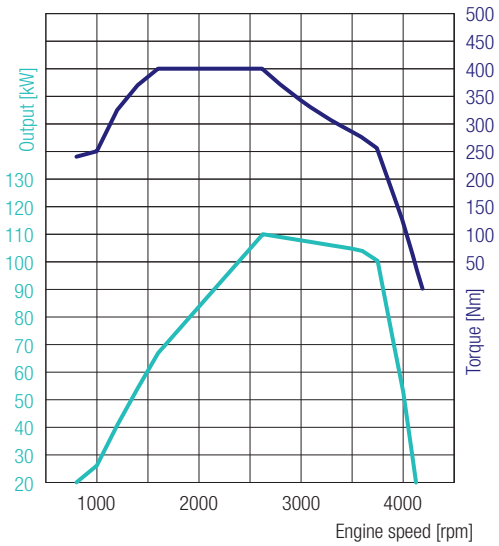

CANTER 7C15D
RIGHT-HAND DRIVE

4P10 – 110 kW (150 PS)
400 Nm@1600 rpm
110 kW@2626 rpm

ENGINE (EURO VI)				
Type		Water-cooled four-stroke diesel engine with turbocharger, intercooler and direct injection		
No. of cylinders		4/in-line		
Capacity		2998 cm^3		
Peak output		110 kW (150 hp) / 2626 rpm		
Rated torque		400 Nm / 1600 rpm		
Diesel particulate filter		Service life approx. 300,000 km		
Alternator		Alternating current 12 V, 140 A		
Exhaust gas aftertreatment		SCR + DPF		
PTO (optional)	Type	31 kW with flange	62 kW with flange	31 kW for directly connected pumps
	Torque at peak output	196 Nm	392 Nm	196 Nm
	Gear ratios	1:0.644	1:0.723	1:0.638
	Engine speed at peak output	1500 rpm		

POWERTRAIN		
Transmission	Model	Manual gearbox, 5 forward gears, 1 reverse gear
	Gear ratio	5.494 / 3.193 / 1.689 / 1.000 / 0.723 / reverse 5.494
Rear axle gear ratio	Ratio	4.875

CHASSIS		
Front axle / rear axle	Model	F350T / R035T
	Load-bearing capacity front/rear	3100 kg / 5740 kg
Tyres		205/75R17.5C 124/122 M
		Twin tyres at rear, tyres with optimised rolling resistance
Wheel		17.5 x 6.00 - 127 - 9t - 6 wheel bolts
Steering		Right-hand drive
		Recirculating-ball steering with power assist, tilting telescopic steering column with steering-wheel lock
Brake	Service brake	Hydraulic with vacuum power assist, dual-circuit with load-dependent brake proportioning valve at rear wheels
	Front / rear	Disc brake (252 × 40)
	Parking brake	Mechanical expanding brake on drive shaft at rear of transmission
	Auxiliary brake	Exhaust brake (50 kW)
Suspension	Front / rear	Semi-elliptic leaf spring with shock absorber and stabiliser
Frame	Type	Ladder-type frame with reinforcements and crossmembers
Fuel tank capacity		100 litres
Electrical system	Batteries	12 V (100 Ah - 760 A(EN))

FUSO – A Daimler Truck Group Brand

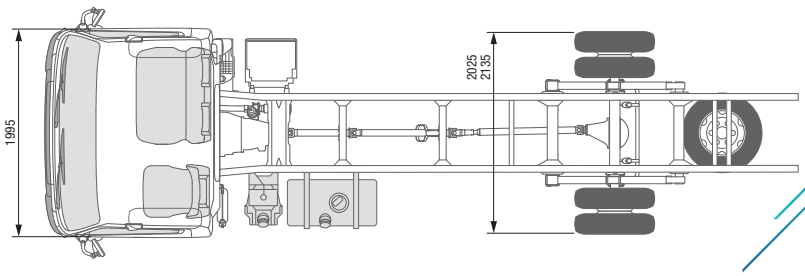

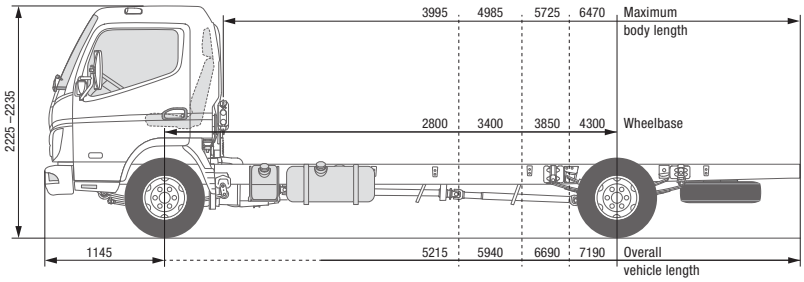

CANTER 7C15 DUONIC® 2.0
LEFT-HAND DRIVE

MODEL / VEHICLE TYPE		7C15			
Cab type / crew		Comfort, single cab / 3			
Model variant		46923312	46923512	46923712	46923812
FUSO model code		FEB71CL3SEUB	FEB71EL3SEUB	FEB71GL3SEUB	FEC71HL3SEUB
DIMENSIONS [MM]					
Wheelbase		2800	3400	3850	4300
Overall length		5140	5940	6690	7190
Cab length		1625			
Width overall		2025			2135
Cab width		1995			
Height overall		2225	2225	2225	2235
Track width	Front / rear	1665 / 1560			1665 / 1670
Frame height (at end of frame)		845			840
Ground clearance		185			
Cab to rear axle		2275	2875	3325	3775
Cab to end of frame		3545	4270	5020	5520
Maximum body length**		3995	4985	5725	6470
Frame width		750			850
Front overhang		1145			
Rear overhang		1195	1395	1695	1745
Front axle to front of body		625			
Recommended distance cab to body		100			
WEIGHTS [KG]					
Empty weight*		2575	2610	2630	2670
	Front* / rear*	1690 / 885	1705 / 905	1715 / 915	1725 / 945
Gross vehicle weight / gross combination weight		7490 / 10990			
Axle loads*	Front / rear	3100 / 5800	3100 / 5800	3100 / 5740	3100 / 5680
Towed weight	Braked / unbraked	3500 / 750			
Chassis load bearing capacity*		4925	4890	4870	4830
CALCULATED OUTPUT					
Maximum speed	km/h	130			
Minimum turning circle [m]	Kerb to kerb	10.4	12.2	13.8	15.2
	Wall to wall	11.8	13.8	15.2	16.6

* The weight refers to the base vehicle (European series, including coolant, oil, 90% fuel, tyre sealant, tools and driver with 75 kg) without optional equipment. If any optional equipment is added, the weight changes accordingly. ** Calculated maximum value which should be checked depending on the body and application.
Subject to change without notice. All data is approximate. The illustrations may contain accessories and items of optional equipment which are not part of the standard specification. The data sheet may contain product types and support services not available in certain countries.

FUSO – A Daimler Truck Group Brand

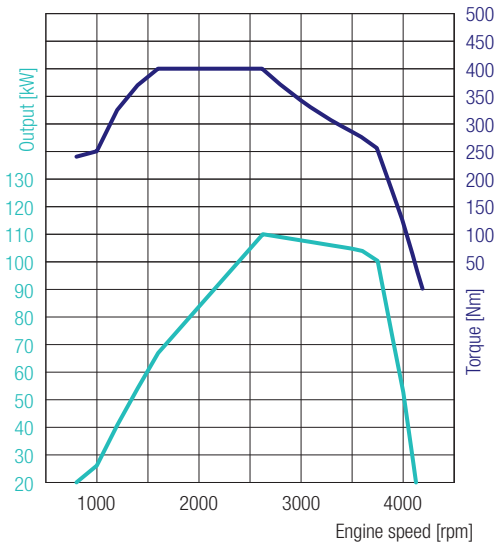

CANTER 7C15 DUONIC® 2.0
LEFT-HAND DRIVE

4P10 – 110 kW (150 PS)
400 Nm@1600 rpm
110 kW@2626 rpm

ENGINE (EURO VI)				
Type		Water-cooled four-stroke diesel engine with turbocharger, intercooler and direct injection		
No. of cylinders		4/in-line		
Capacity		2998 cm³		
Peak output		110 kW (150 hp) / 2626 rpm		
Rated torque		400 Nm / 1600 rpm		
Diesel particulate filter		Service life approx. 300,000 km		
Alternator		Alternating current 12 V, 140 A		
Exhaust gas aftertreatment		SCR + DPF		
PTO (optional)	Type	31 kW with flange	62 kW with flange	31 kW for directly connected pumps
	Torque at peak output	196 Nm	392 Nm	196 Nm
	Gear ratios	1:0.655	1:0.727	1:0.651
	Engine speed at peak output	1500 rpm		
POWERTRAIN				
Transmission	Model	DUONIC® 2.0: Automated transmission with dual clutch, 6 forward speeds and 1 reverse gear		
	Gear ratio	5.397 / 3.788 / 2.310 / 1.474 / 1.000 / 0.701 / reverse 5.397		
Rear axle gear ratio	Ratio	4.875		
CHASSIS				
Front axle / rear axle	Model	F350T / R035T		
	Load-bearing capacity front/rear	3100 kg / 5680 kg		
Tyres		205/75R17.5C 124/122 M		
		Twin tyres at rear, tyres with optimised rolling resistance		
Wheel		17.5 x 6.00 - 127 - 9t - 6 wheel bolts		
Steering		Left-hand drive		
		Recirculating-ball steering with power assist, tilting telescopic steering column with steering-wheel lock		
Brake	Service brake	Hydraulic with vacuum power assist, dual-circuit with load-dependent brake proportioning valve at rear wheels		
	Front / rear	Disc brake (252 × 40)		
	Parking brake	Mechanical expanding brake on drive shaft at rear of transmission		
	Auxiliary brake	Exhaust brake (50 kW)		
Suspension	Front / rear	Semi-elliptic leaf spring with shock absorber and stabiliser		
Frame	Type	Ladder-type frame with reinforcements and crossmembers		
Fuel tank capacity		100 litres		
Electrical system	Batteries	12 V (100 Ah - 760 A(EN))		

FUSO – A Daimler Truck Group Brand

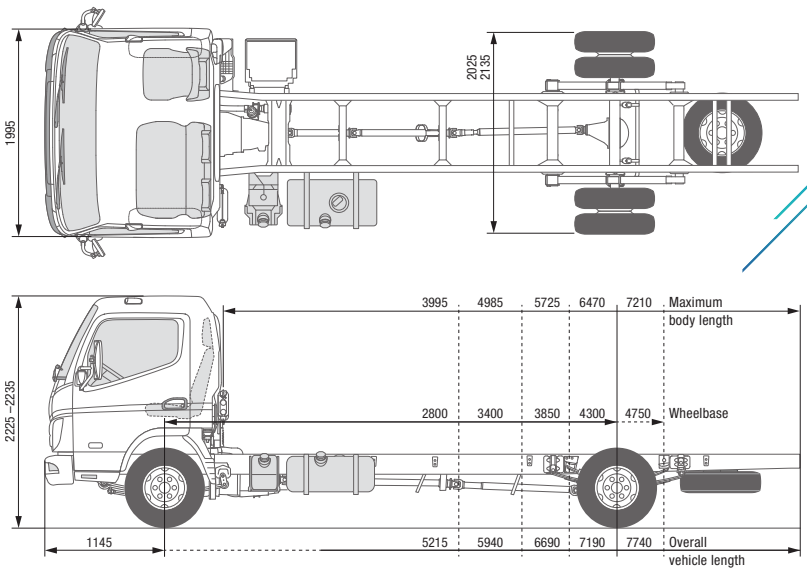

CANTER 7C15 DUONIC® 2.0
RIGHT-HAND DRIVE

MODEL / VEHICLE TYPE		7C15				
Cab type / crew		Comfort, single cab / 3				
Model variant		46923322	46923522	46923722	46923822	46923925
FUSO model code		FEB71CR3SEUB	FEB71ER3SEUB	FEB71GR3SEUB	FEC71HR3SEUB	FEC71KR3SEUB
DIMENSIONS [MM]						
Wheelbase		2800	3400	3850	4300	4750
Overall length		5140	5940	6690	7190	7740
Cab length		1625				
Width overall		2025			2135	
Cab width		1995				
Height overall		2225			2235	
Track width	Front / rear	1665 / 1560			1665 / 1670	
Frame height (at end of frame)		845			840	845
Ground clearance		185				
Cab to rear axle		2275	2875	3325	3775	4225
Cab to end of frame		3545	4270	5020	5520	6070
Maximum body length**		3995	4985	5725	6470	7210
Frame width		750			850	
Front overhang		1145				
Rear overhang		1195	1395	1695	1745	1845
Front axle to front of body		625				
Recommended distance cab to body		100				
WEIGHTS [KG]						
Empty weight*		2575	2610	2630	2670	2690
	Front* / rear*	1690 / 885	1705 / 905	1715 / 915	1725 / 945	1740 / 950
Gross vehicle weight / gross combination weight		7490 / 10990				
Axle loads*	Front / rear	3100 / 5800	3100 / 5800	3100 / 5740	3100 / 5680	3100 / 5640
Towed weight	Braked / unbraked	3500 / 750				
Chassis load bearing capacity*		4925	4890	4870	4830	4810
CALCULATED OUTPUT						
Maximum speed	km/h	130				
Minimum turning circle [m]	Kerb to kerb	10.4	12.2	13.8	15.2	16.6
	Wall to wall	11.8	13.8	15.2	16.6	18.0

* The weight refers to the base vehicle (European series, including coolant, oil, 90% fuel, tyre sealant, tools and driver with 75 kg) without optional equipment. If any optional equipment is added, the weight changes accordingly. ** Calculated maximum value which should be checked depending on the body and application.
Subject to change without notice. All data is approximate. The illustrations may contain accessories and items of optional equipment which are not part of the standard specification. The data sheet may contain product types and support services not available in certain countries.

FUSO – A Daimler Truck Group Brand

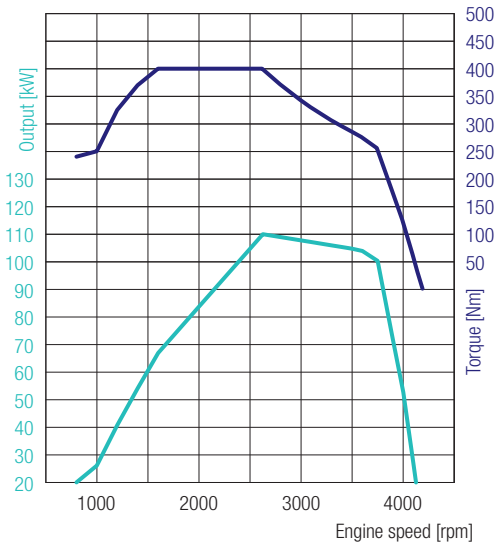

CANTER 7C15 DUONIC® 2.0
RIGHT-HAND DRIVE

4P10 – 110 kW (150 PS)
400 Nm@1600 rpm
110 kW@2626 rpm

ENGINE (EURO VI)				
Type		Water-cooled four-stroke diesel engine with turbocharger, intercooler and direct injection		
No. of cylinders		4/in-line		
Capacity		2998 cm³		
Peak output		110 kW (150 hp) / 2626 rpm		
Rated torque		400 Nm / 1600 rpm		
Diesel particulate filter		Service life approx. 300,000 km		
Alternator		Alternating current 12 V, 140 A		
Exhaust gas aftertreatment		SCR + DPF		
PTO (optional)	Type	31 kW with flange	62 kW with flange	31 kW for directly connected pumps
	Torque at peak output	196 Nm	392 Nm	196 Nm
	Gear ratios	1:0.655	1:0.727	1:0.651
	Engine speed at peak output	1500 rpm		

POWERTRAIN		
Transmission	Model	DUONIC® 2.0: Automated transmission with dual clutch, 6 forward speeds and 1 reverse gear
	Gear ratio	5.397 / 3.788 / 2.310 / 1.474 / 1.000 / 0.701 / reverse 5.397
Rear axle gear ratio	Ratio	4.875

CHASSIS		
Front axle / rear axle	Model	F350T / R035T
	Load-bearing capacity front/rear	3.1/5.8 t (2.80 m); 3.1/5.8 t (3.4 m); 3.1/5.74 t (3.85 m); 3.1/5.68 t (4.3 m); 3.1/5.64 t (4.75 m)
Tyres		205/75R17.5C 124/122 M
		Twin tyres at rear, tyres with optimised rolling resistance
Wheel		17.5 x 6.00 - 127 - 9t - 6 wheel bolts
Steering		Right-hand drive
		Recirculating-ball steering with power assist, tilting telescopic steering column with steering-wheel lock
Brake	Service brake	Hydraulic with vacuum power assist, dual-circuit with load-dependent brake proportioning valve at rear wheels
	Front / rear	Disc brake (252 × 40)
	Parking brake	Mechanical expanding brake on drive shaft at rear of transmission
	Auxiliary brake	Exhaust brake (50 kW)
Suspension	Front / rear	Semi-elliptic leaf spring with shock absorber and stabiliser
Frame	Type	Ladder-type frame with reinforcements and crossmembers
Fuel tank capacity		100 litres
Electrical system	Batteries	12 V (100 Ah - 760 A(EN))

FUSO – A Daimler Truck Group Brand

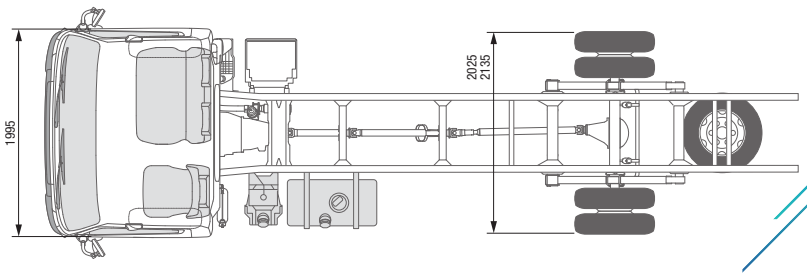

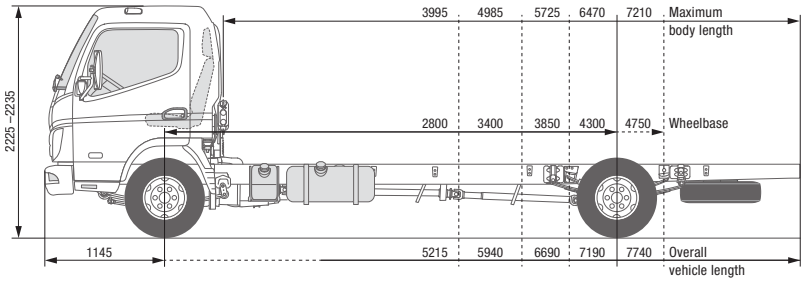

CANTER 7C18
LEFT-HAND DRIVE

MODEL / VEHICLE TYPE		7C18				
Cab type / crew		Comfort, single cab / 3				
Model variant		46925312	46925512	46925712	46925812	46925915
FUSO model code		FEB71CL4SEUC	FEB71EL4SEUC	FEB71GL4SEUC	FEC71HL4SEUC	FEC71KL4SEUC
DIMENSIONS [MM]						
Wheelbase		2800	3400	3850	4300	4750
Overall length		5140	5940	6690	7190	7740
Cab length		1625				
Width overall		2025			2135	
Cab width		1995				
Height overall		2225			2235	
Track width	Front / rear	1665 / 1560			1665 / 1670	
Frame height (at end of frame)		845			840	845
Ground clearance		185				
Cab to rear axle		2275	2875	3325	3775	4225
Cab to end of frame		3545	4270	5020	5520	6070
Maximum body length**		3995	4985	5725	6470	7210
Frame width		750			850	
Front overhang		1145				
Rear overhang		1195	1395	1695	1745	1845
Front axle to front of body		625				
Recommended distance cab to body		100				
WEIGHTS [KG]						
Empty weight*		2560	2595	2615	2655	2675
	Front* / rear*	1680 / 880	1695 / 900	1700 / 915	1710 / 945	1740 / 935
Gross vehicle weight / gross combination weight		7490 / 10990				
Axle loads*	Front / rear	3100 / 5800	3100 / 5800	3100 / 5740	3100 / 5680	3100 / 5640
Towed weight	Braked / unbraked	3500 / 750				
Chassis load bearing capacity*		4940	4905	4885	4845	4825
CALCULATED OUTPUT						
Maximum speed	km/h	130				
Minimum turning circle [m]	Kerb to kerb	12.2	12.2	13.8	15.2	16.6
	Wall to wall	13.8	13.8	15.2	16.6	18.0

* The weight refers to the base vehicle (European series, including coolant, oil, 90% fuel, tyre sealant, tools and driver with 75 kg) without optional equipment. If any optional equipment is added, the weight changes accordingly. ** Calculated maximum value which should be checked depending on the body and application.
Subject to change without notice. All data is approximate. The illustrations may contain accessories and items of optional equipment which are not part of the standard specification. The data sheet may contain product types and support services not available in certain countries.

FUSO – A Daimler Truck Group Brand

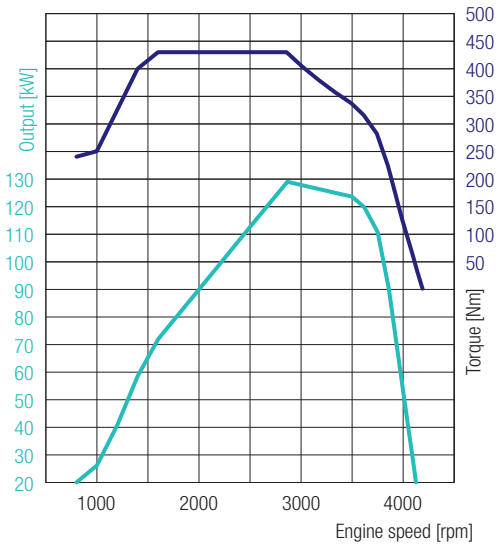

CANTER 7C18
LEFT-HAND DRIVE

4P10 – 129 kW (175 PS)
430 Nm@1600 rpm
129 kW@2865 rpm

ENGINE (EURO VI)				
Type		Water-cooled four-stroke diesel engine with turbocharger, intercooler and direct injection		
No. of cylinders		4/in-line		
Capacity		2998 cm³		
Peak output		129 kW (175 hp) / 2865 rpm		
Rated torque		430 Nm / 1600 rpm		
Diesel particulate filter		Service life approx. 300,000 km		
Alternator		Alternating current 12 V, 140 A		
Exhaust gas aftertreatment		SCR + DPF		
PTO (optional)	Type	31 kW with flange	62 kW with flange	31 kW for directly connected pumps
	Torque at peak output	196 Nm	392 Nm	196 Nm
	Gear ratios	1:0.644	1:0.723	1:0.638
	Engine speed at peak output	1500 rpm		
POWERTRAIN				
Transmission	Model	Manual gearbox, 5 forward gears, 1 reverse gear		
	Gear ratio	5.494 / 3.193 / 1.689 / 1.000 / 0.723 / reverse 5.494		
Rear axle gear ratio	Ratio	4.875		
CHASSIS				
Front axle / rear axle	Model	F350T / R035T		
	Load-bearing capacity front/rear	3.1/5.8 t (2.80 m); 3.1/5.8 t (3.4 m); 3.1/5.74 t (3.85 m); 3.1/5.68 t (4.3 m); 3.1/5.64 t (4.75 m)		
Tyres		205/75R17.5C 124/122 M		
		Twin tyres at rear, tyres with optimised rolling resistance		
Wheel		17.5 x 6.00 - 127 - 9t - 6 wheel bolts		
Steering		Left-hand drive		
		Recirculating-ball steering with power assist, tilting telescopic steering column with steering-wheel lock		
Brake	Service brake	Hydraulic with vacuum power assist, dual-circuit with load-dependent brake proportioning valve at rear wheels		
	Front / rear	Disc brake (252 × 40)		
	Parking brake	Mechanical expanding brake on drive shaft at rear of transmission		
	Auxiliary brake	Exhaust brake (50 kW)		
Suspension	Front / rear	Semi-elliptic leaf spring with shock absorber and stabiliser		
Frame	Type	Ladder-type frame with reinforcements and crossmembers		
Fuel tank capacity		100 litres		
Electrical system	Batteries	12 V (100 Ah - 760 A(EN))		

FUSO – A Daimler Truck Group Brand

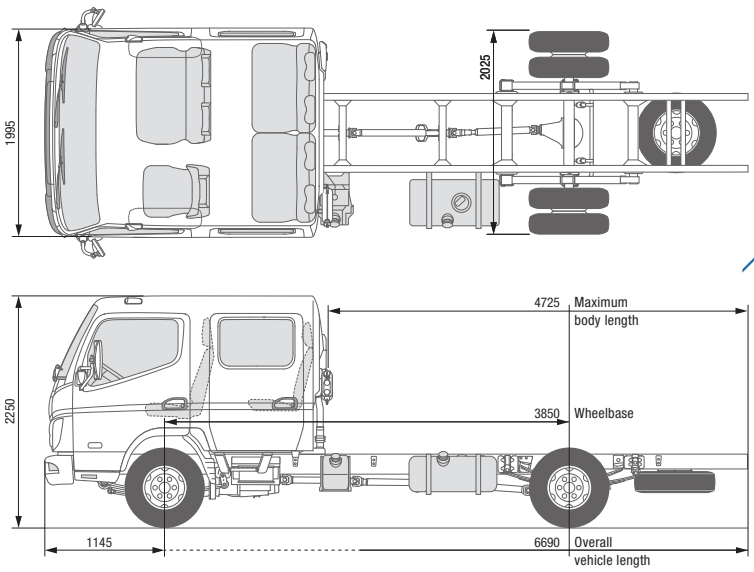

CANTER 7C18D
LEFT-HAND DRIVE

MODEL / VEHICLE TYPE		7C18D
Cab type / crew		Comfort, crew cab / 7
Model variant		46925714
FUSO model code		FEB71GL4WEUC
DIMENSIONS [MM]		
Wheelbase		3850
Overall length		6690
Cab length		2625
Width overall		2025
Cab width		1995
Height overall		2250
Track width	Front / rear	1665 / 1560
Frame height (at end of frame)		845
Ground clearance		185
Cab to rear axle		2325
Cab to end of frame		4020
Maximum body length**		4725
Frame width		750
Front overhang		1145
Rear overhang		1695
Front axle to front of body		1625
Recommended distance cab to body		100
WEIGHTS [KG]		
Empty weight*		2830
	Front* / rear*	1840 / 990
Gross vehicle weight / gross combination weight		7490 / 10990
Axle loads*	Front / rear	3100 / 5740
Towed weight	Braked / unbraked	3500 / 750
Chassis load bearing capacity*		4670
CALCULATED OUTPUT		
Maximum speed	km/h	130
Minimum turning circle [m]	Kerb to kerb	13.8
	Wall to wall	15.2

* The weight refers to the base vehicle (European series, including coolant, oil, 90% fuel, tyre sealant, tools and driver with 75 kg) without optional equipment. If any optional equipment is added, the weight changes accordingly. ** Calculated maximum value which should be checked depending on the body and application.
Subject to change without notice. All data is approximate. The illustrations may contain accessories and items of optional equipment which are not part of the standard specification. The data sheet may contain product types and support services not available in certain countries.

FUSO – A Daimler Truck Group Brand

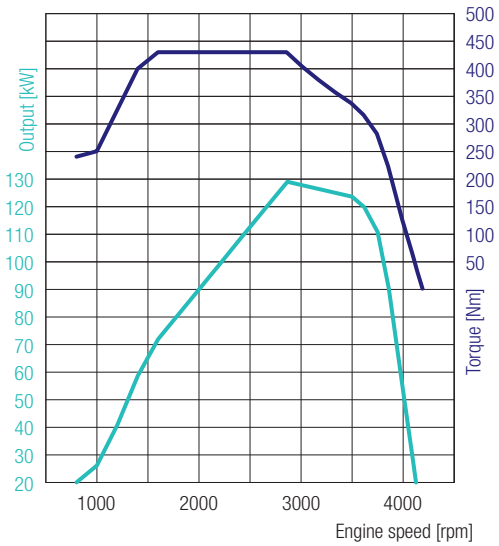

CANTER 7C18D
LEFT-HAND DRIVE

4P10 – 129 kW (175 PS)
430 Nm@1600 rpm
129 kW@2865 rpm

ENGINE (EURO VI)				
Type		Water-cooled four-stroke diesel engine with turbocharger, intercooler and direct injection		
No. of cylinders		4/in-line		
Capacity		2998 cm³		
Peak output		129 kW (175 hp) / 2865 rpm		
Rated torque		430 Nm / 1600 rpm		
Diesel particulate filter		Service life approx. 300,000 km		
Alternator		Alternating current 12 V, 140 A		
Exhaust gas aftertreatment		SCR + DPF		
PTO (optional)	Type	31 kW with flange	62 kW with flange	31 kW for directly connected pumps
	Torque at peak output	196 Nm	392 Nm	196 Nm
	Gear ratios	1:0.644	1:0.723	1:0.638
	Engine speed at peak output	1500 rpm		
POWERTRAIN				
Transmission	Model	Manual gearbox, 5 forward gears, 1 reverse gear		
	Gear ratio	5.494 / 3.193 / 1.689 / 1.000 / 0.723 / reverse 5.494		
Rear axle gear ratio	Ratio	4.875		
CHASSIS				
Front axle / rear axle	Model	F350T / R035T		
	Load-bearing capacity front/rear	3100 kg / 5740 kg		
Tyres		205/75R17.5C 124/122 M		
		Tyres with optimised rolling resistance		
Wheel		17.5 x 6.00 - 127 - 9t - 6 wheel bolts		
Steering		Left-hand drive		
		Recirculating-ball steering with power assist, tilting telescopic steering column with steering-wheel lock		
Brake	Service brake	Hydraulic with vacuum power assist, dual-circuit with load-dependent brake proportioning valve at rear wheels		
	Front / rear	Disc brake (252 × 40)		
	Parking brake	Mechanical expanding brake on drive shaft at rear of transmission		
	Auxiliary brake	Exhaust brake (50 kW)		
Suspension	Front / rear	Semi-elliptic leaf spring with shock absorber and stabiliser		
Frame	Type	Ladder-type frame with reinforcements and crossmembers		
Fuel tank capacity		100 litres		
Electrical system	Batteries	12 V (100 Ah - 760 A(EN))		

FUSO – A Daimler Truck Group Brand

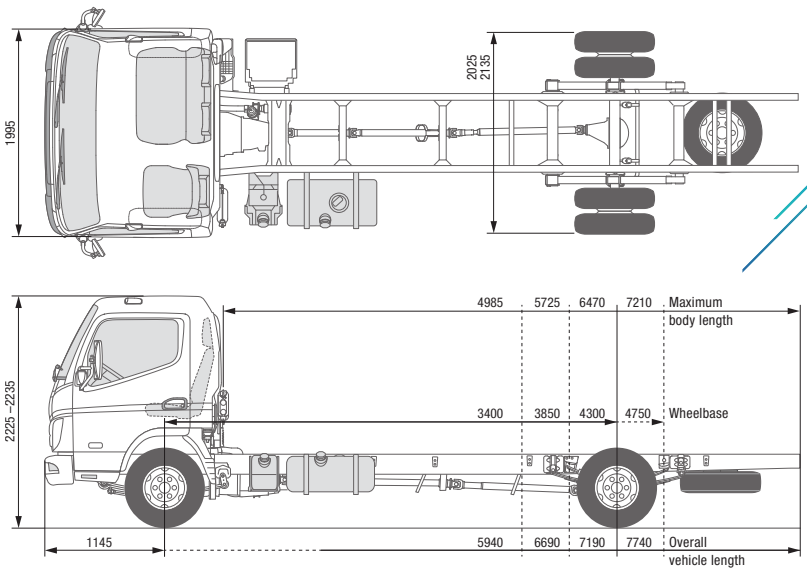

CANTER 7C18 DUONIC® 2.0
LEFT-HAND DRIVE

MODEL / VEHICLE TYPE		7C18			
Cab type / crew		Comfort, single cab / 3			
Model variant		46926512	46926712	46926812	46926915
FUSO model code		FEB71EL3SEUC	FEB71GL3SEUC	FEC71HL3SEUC	FEC71KL3SEUC
DIMENSIONS [MM]					
Wheelbase		3400	3850	4300	4750
Overall length		5940	6690	7190	7740
Cab length		1625			
Width overall		2025		2135	
Cab width		1995			
Height overall		2225		2235	
Track width	Front / rear	1665 / 1560		1665 / 1670	
Frame height (at end of frame)		845		840	845
Ground clearance		185			
Cab to rear axle		2875	3325	3775	4225
Cab to end of frame		4270	5020	5520	6070
Maximum body length**		4985	5725	6470	7210
Frame width		750		850	
Front overhang		1145			
Rear overhang		1395	1695	1745	1845
Front axle to front of body		625			
Recommended distance cab to body		100			
WEIGHTS [KG]					
Empty weight*		2610	2630	2670	2690
	Front* / rear*	1705 / 905	1715 / 915	1725 / 945	1740 / 950
Gross vehicle weight / gross combination weight		7490 / 10990			
Axle loads*	Front / rear	3100 / 5800	3100 / 5740	3100 / 5680	3100 / 5640
Towed weight	Braked / unbraked	3500 / 750			
Chassis load bearing capacity*		4890	4870	4830	4810
CALCULATED OUTPUT					
Maximum speed	km/h	130			
Minimum turning circle [m]	Kerb to kerb	12.2	13.8	15.2	16.6
	Wall to wall	13.8	15.2	16.6	18.0

* The weight refers to the base vehicle (European series, including coolant, oil, 90% fuel, tyre sealant, tools and driver with 75 kg) without optional equipment. If any optional equipment is added, the weight changes accordingly. ** Calculated maximum value which should be checked depending on the body and application.
Subject to change without notice. All data is approximate. The illustrations may contain accessories and items of optional equipment which are not part of the standard specification. The data sheet may contain product types and support services not available in certain countries.

FUSO – A Daimler Truck Group Brand

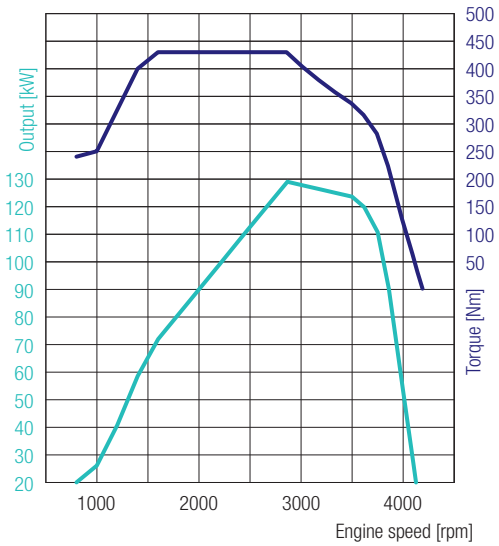

CANTER 7C18 DUONIC® 2.0
LEFT-HAND DRIVE

4P10 – 129 kW (175 PS)
430 Nm@1600 rpm
129 kW@2865 rpm

ENGINE (EURO VI)				
Type		Water-cooled four-stroke diesel engine with turbocharger, intercooler and direct injection		
No. of cylinders		4/in-line		
Capacity		2998 cm³		
Peak output		129 kW (175 hp) / 2865 rpm		
Rated torque		430 Nm / 1600 rpm		
Diesel particulate filter		Service life approx. 300,000 km		
Alternator		Alternating current 12 V, 140 A		
Exhaust gas aftertreatment		SCR + DPF		
PTO (optional)	Type	31 kW with flange	62 kW with flange	31 kW for directly connected pumps
	Torque at peak output	196 Nm	392 Nm	196 Nm
	Gear ratios	1:0.655	1:0.727	1:0.651
	Engine speed at peak output	1500 rpm		
POWERTRAIN				
Transmission	Model	DUONIC® 2.0: Automated transmission with dual clutch, 6 forward speeds and 1 reverse gear		
	Gear ratio	5.397 / 3.788 / 2.310 / 1.474 / 1.000 / 0.701 / reverse 5.397		
Rear axle gear ratio	Ratio	4.875		
CHASSIS				
Front axle / rear axle	Model	F350T / R035T		
	Load-bearing capacity front/rear	3100/5800 kg (3400 mm); 3100/5740 kg (3850 mm); 3100/5680 kg (4300 mm); 3100/5640 kg (4750 mm)		
Tyres		205/75R17.5C 124/122 M		
		Tyres with optimised rolling resistance		
Wheel		17.5 x 6.00 - 127 - 9t - 6 wheel bolts		
Steering		Left-hand drive		
		Recirculating-ball steering with power assist, tilting telescopic steering column with steering-wheel lock		
Brake	Service brake	Hydraulic with vacuum power assist, dual-circuit with load-dependent brake proportioning valve at rear wheels		
	Front / rear	Disc brake (252 × 40)		
	Parking brake	Mechanical expanding brake on drive shaft at rear of transmission		
	Auxiliary brake	Exhaust brake (50 kW)		
Suspension	Front / rear	Semi-elliptic leaf spring with shock absorber and stabiliser		
Frame	Type	Ladder-type frame with reinforcements and crossmembers		
Fuel tank capacity		100 litres		
Electrical system	Batteries	12 V (100 Ah - 760 A(EN))		

FUSO – A Daimler Truck Group Brand

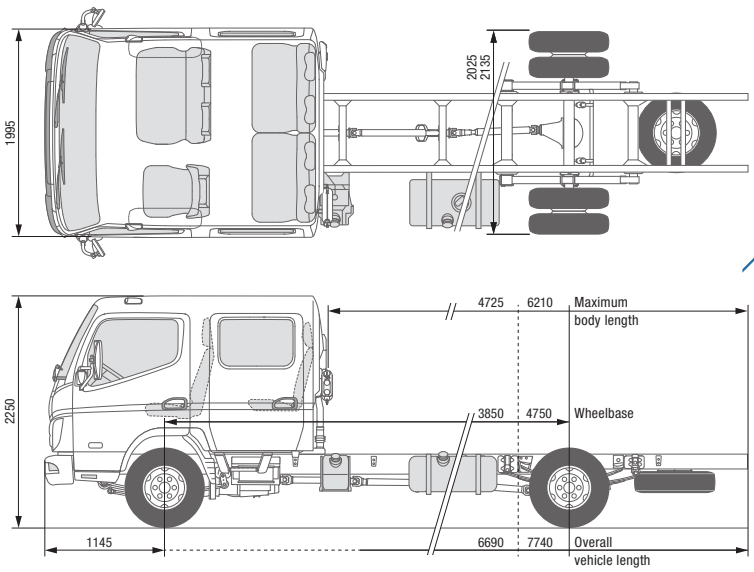

CANTER 7C18D DUONIC® 2.0
LEFT-HAND DRIVE

MODEL / VEHICLE TYPE		7C18D	
Cab type / crew		Comfort, crew cab / 7	
Model variant		46926714	46926914
FUSO model code		FEB71GL3WEUC	FEC71KL3WEUC
DIMENSIONS [MM]			
Wheelbase		3850	4750
Overall length		6690	7740
Cab length		2625	
Width overall		2025	2135
Cab width		1995	
Height overall		2250	
Track width	Front / rear	1665 / 1560	1665 / 1670
Frame height (at end of frame)		845	
Ground clearance		185	
Cab to rear axle		2325	3225
Cab to end of frame		4020	5070
Maximum body length**		4725	6210
Frame width		750	850
Front overhang		1145	
Rear overhang		1695	1845
Front axle to front of body		1625	
Recommended distance cab to body		100	
WEIGHTS [KG]			
Empty weight*		2850	2910
	Front* / rear*	1860 / 990	1905 / 1005
Gross vehicle weight / gross combination weight		7490 / 10990	
Axle loads*	Front / rear	3100 / 5740	3100 / 5640
Towed weight	Braked / unbraked	3500 / 750	
Chassis load bearing capacity*		4650	4590
CALCULATED OUTPUT			
Maximum speed	km/h	130	
Minimum turning circle [m]	Kerb to kerb	13.8	16.6
	Wall to wall	15.2	18.0

* The weight refers to the base vehicle (European series, including coolant, oil, 90% fuel, tyre sealant, tools and driver with 75 kg) without optional equipment. If any optional equipment is added, the weight changes accordingly. ** Calculated maximum value which should be checked depending on the body and application.
Subject to change without notice. All data is approximate. The illustrations may contain accessories and items of optional equipment which are not part of the standard specification. The data sheet may contain product types and support services not available in certain countries.

FUSO – A Daimler Truck Group Brand

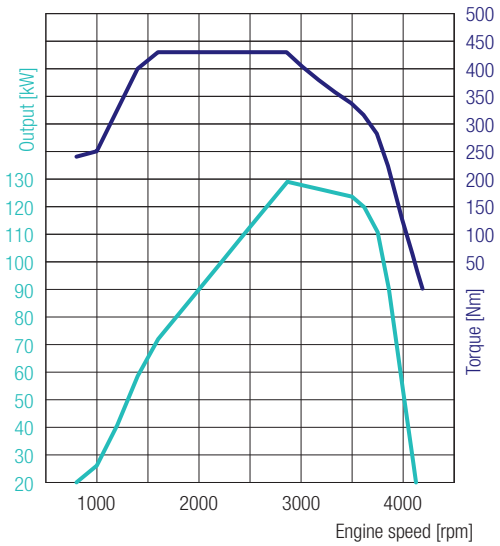

CANTER 7C18D DUONIC® 2.0
LEFT-HAND DRIVE

4P10 – 129 kW (175 PS)
430 Nm@1600 rpm
129 kW@2865 rpm

ENGINE (EURO VI)				
Type		Water-cooled four-stroke diesel engine with turbocharger, intercooler and direct injection		
No. of cylinders		4/in-line		
Capacity		2998 cm³		
Peak output		129 kW (175 hp) / 2865 rpm		
Rated torque		430 Nm / 1600 rpm		
Diesel particulate filter		Service life approx. 300,000 km		
Alternator		Alternating current 12 V, 140 A		
Exhaust gas aftertreatment		SCR + DPF		
PTO (optional)	Type	31 kW with flange	62 kW with flange	31 kW for directly connected pumps
	Torque at peak output	196 Nm	392 Nm	196 Nm
	Gear ratios	1:0.655	1:0.727	1:0.651
	Engine speed at peak output	1500 rpm		
POWERTRAIN				
Transmission	Model	DUONIC® 2.0: Automated transmission with dual clutch, 6 forward speeds and 1 reverse gear		
	Gear ratio	5.397 / 3.788 / 2.310 / 1.474 / 1.000 / 0.701 / reverse 5.397		
Rear axle gear ratio	Ratio	4.875		
CHASSIS				
Front axle / rear axle	Model	F350T / R035T		
	Load-bearing capacity front/rear	3100 kg / 5740 kg (3850 mm)	3100 kg / 5640 kg (4750 mm)	
Tyres		205/75R17.5C 124/122 M		
		Twin tyres at rear, tyres with optimised rolling resistance		
Wheel		17.5 x 6.00 - 127 - 9t - 6 wheel bolts		
Steering		Left-hand drive		
		Recirculating-ball steering with power assist, tilting telescopic steering column with steering-wheel lock		
Brake	Service brake	Hydraulic with vacuum power assist, dual-circuit with load-dependent brake proportioning valve at rear wheels		
	Front / rear	Disc brake (252 × 40)		
	Parking brake	Mechanical expanding brake on drive shaft at rear of transmission		
	Auxiliary brake	Exhaust brake (50 kW)		
Suspension	Front / rear	Semi-elliptic leaf spring with shock absorber and stabiliser		
Frame	Type	Ladder-type frame with reinforcements and crossmembers		
Fuel tank capacity		100 litres		
Electrical system	Batteries	12 V (100 Ah - 760 A(EN))		

FUSO – A Daimler Truck Group Brand

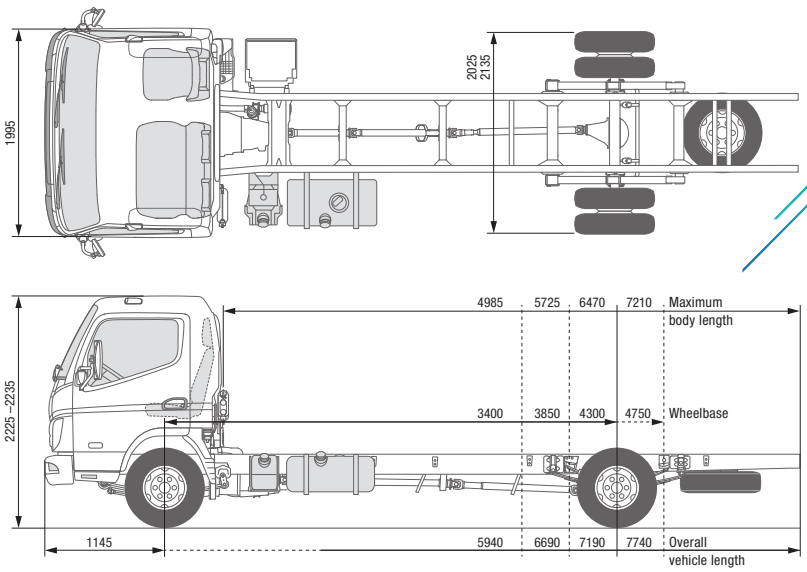

CANTER 7C18 DUONIC® 2.0
RIGHT-HAND DRIVE

MODEL / VEHICLE TYPE		7C18			
Cab type / crew		Comfort, single cab / 3			
Model variant		46926522	46926722	46926822	46926925
FUSO model code		FEB71ER3SEUC	FEB71GR3SEUC	FEC71HR3SEUC	FEC71KR3SEUC
DIMENSIONS [MM]					
Wheelbase		3400	3850	4300	4750
Overall length		5940	6690	7190	7740
Cab length		1625			
Width overall		2025		2135	
Cab width		1995			
Height overall		2225		2235	
Track width	Front / rear	1665 / 1560		1665 / 1670	
Frame height (at end of frame)		845		840	845
Ground clearance		185			
Cab to rear axle		2875	3325	3775	4225
Cab to end of frame		4270	5020	5520	6070
Maximum body length**		4985	5725	6470	7210
Frame width		750		850	
Front overhang		1145			
Rear overhang		1395	1695	1745	1845
Front axle to front of body		625			
Recommended distance cab to body		100			
WEIGHTS [KG]					
Empty weight*		2610	2630	2670	2690
	Front* / rear*	1705 / 905	1715 / 915	1725 / 945	1740 / 950
Gross vehicle weight / gross combination weight		7490 / 10990			
Axle loads*	Front / rear	3100 / 5800	3100 / 5740	3100 / 5680	3100 / 5640
Towed weight	Braked / unbraked	3500 / 750			
Chassis load bearing capacity*		4890	4870	4830	4810
CALCULATED OUTPUT					
Maximum speed	km/h	130			
Minimum turning circle [m]	Kerb to kerb	12.2	13.8	15.2	16.6
	Wall to wall	13.8	15.2	16.6	18.0

* The weight refers to the base vehicle (European series, including coolant, oil, 90% fuel, tyre sealant, tools and driver with 75 kg) without optional equipment. If any optional equipment is added, the weight changes accordingly. ** Calculated maximum value which should be checked depending on the body and application.
Subject to change without notice. All data is approximate. The illustrations may contain accessories and items of optional equipment which are not part of the standard specification. The data sheet may contain product types and support services not available in certain countries.

FUSO – A Daimler Truck Group Brand

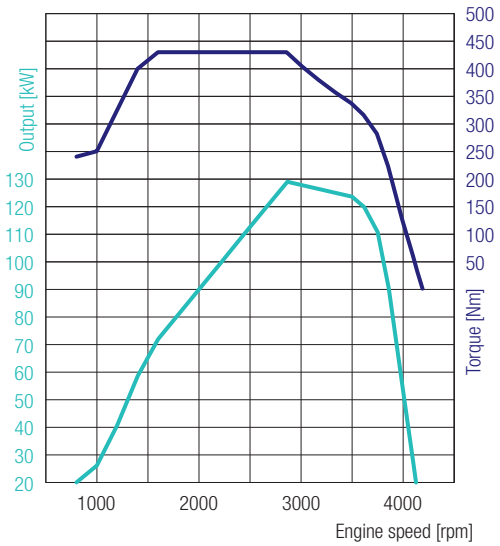

CANTER 7C18 DUONIC® 2.0
RIGHT-HAND DRIVE

4P10 – 129 kW (175 PS)
430 Nm@1600 rpm
129 kW@2865 rpm

ENGINE (EURO VI)				
Type		Water-cooled four-stroke diesel engine with turbocharger, intercooler and direct injection		
No. of cylinders		4/in-line		
Capacity		2998 cm³		
Peak output		129 kW (175 hp) / 2865 rpm		
Rated torque		430 Nm / 1600 rpm		
Diesel particulate filter		Service life approx. 300,000 km		
Alternator		Alternating current 12 V, 140 A		
Exhaust gas aftertreatment		SCR + DPF		
PTO (optional)	Type	31 kW with flange	62 kW with flange	31 kW for directly connected pumps
	Torque at peak output	196 Nm	392 Nm	196 Nm
	Gear ratios	1:0.655	1:0.727	1:0.651
	Engine speed at peak output	1500 rpm		

POWERTRAIN		
Transmission	Model	DUONIC® 2.0: Automated transmission with dual clutch, 6 forward speeds and 1 reverse gear
	Gear ratio	5.397 / 3.788 / 2.310 / 1.474 / 1.000 / 0.701 / reverse 5.397
Rear axle gear ratio	Ratio	4.875

CHASSIS		
Front axle / rear axle	Model	F350T / R035T
	Load-bearing capacity front/rear	3100/5800 kg (3400 mm); 3100/5740 kg (3850 mm); 3100/5680 kg (4300 mm); 3100/5640 kg (4750 mm)
Tyres		205/75R17.5C 124/122 M
		Twin tyres at rear, tyres with optimised rolling resistance
Wheel		17.5 x 6.00 - 127 - 9t - 6 wheel bolts
Steering		Right-hand drive
		Recirculating-ball steering with power assist, tilting telescopic steering column with steering-wheel lock
Brake	Service brake	Hydraulic with vacuum power assist, dual-circuit with load-dependent brake proportioning valve at rear wheels
	Front / rear	Disc brake (252 × 40)
	Parking brake	Mechanical expanding brake on drive shaft at rear of transmission
	Auxiliary brake	Exhaust brake (50 kW)
Suspension	Front / rear	Semi-elliptic leaf spring with shock absorber and stabiliser
Frame	Type	Ladder-type frame with reinforcements and crossmembers
Fuel tank capacity		100 litres
Electrical system	Batteries	12 V (100 Ah - 760 A(EN))

FUSO – A Daimler Truck Group Brand

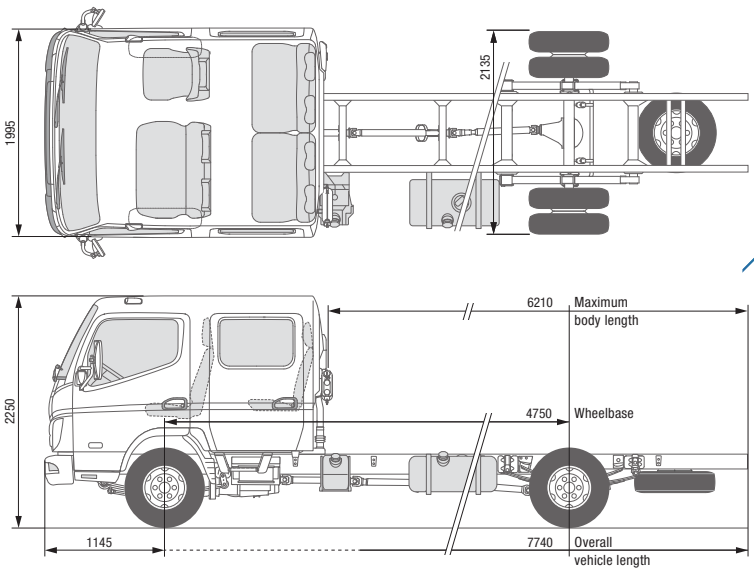

CANTER 7C18D DUONIC® 2.0
RIGHT-HAND DRIVE

MODEL / VEHICLE TYPE		7C18D
Cab type / crew		Comfort, crew cab / 7
Model variant		46926924
FUSO model code		FEC71KR3WEUC
DIMENSIONS [MM]		
Wheelbase		4750
Overall length		7740
Cab length		2625
Width overall		2135
Cab width		1995
Height overall		2250
Track width	Front / rear	1665 / 1670
Frame height (at end of frame)		845
Ground clearance		185
Cab to rear axle		3225
Cab to end of frame		5070
Maximum body length**		6210
Frame width		850
Front overhang		1145
Rear overhang		1845
Front axle to front of body		1625
Recommended distance cab to body		100
WEIGHTS [KG]		
Empty weight*		2910
	Front* / rear*	1905 / 1005
Gross vehicle weight / gross combination weight		7490 / 10990
Axle loads*	Front / rear	3100 / 5640
Towed weight	Braked / unbraked	3500 / 750
Chassis load bearing capacity*		4590
CALCULATED OUTPUT		
Maximum speed	km/h	130
Minimum turning circle [m]	Kerb to kerb	16.6
	Wall to wall	18.0

* The weight refers to the base vehicle (European series, including coolant, oil, 90% fuel, tyre sealant, tools and driver with 75 kg) without optional equipment. If any optional equipment is added, the weight changes accordingly. ** Calculated maximum value which should be checked depending on the body and application.
Subject to change without notice. All data is approximate. The illustrations may contain accessories and items of optional equipment which are not part of the standard specification. The data sheet may contain product types and support services not available in certain countries.

FUSO – A Daimler Truck Group Brand

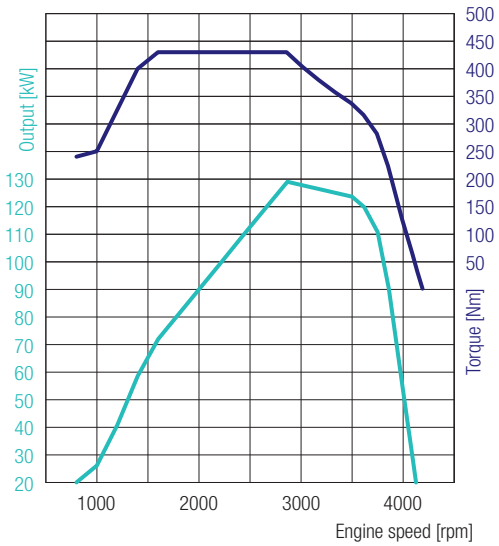

CANTER 7C18D DUONIC® 2.0
RIGHT-HAND DRIVE

4P10 – 129 kW (175 PS)
430 Nm@1600 rpm
129 kW@2865 rpm

ENGINE (EURO VI)				
Type		Water-cooled four-stroke diesel engine with turbocharger, intercooler and direct injection		
No. of cylinders		4/in-line		
Capacity		2998 cm³		
Peak output		129 kW (175 hp) / 2865 rpm		
Rated torque		430 Nm / 1600 rpm		
Diesel particulate filter		Service life approx. 300,000 km		
Alternator		Alternating current 12 V, 140 A		
Exhaust gas aftertreatment		SCR + DPF		
PTO (optional)	Type	31 kW with flange	62 kW with flange	31 kW for directly connected pumps
	Torque at peak output	196 Nm	392 Nm	196 Nm
	Gear ratios	1:0.655	1:0.727	1:0.651
	Engine speed at peak output	1500 rpm		

POWERTRAIN		
Transmission	Model	DUONIC® 2.0: Automated transmission with dual clutch, 6 forward speeds and 1 reverse gear
	Gear ratio	5.397 / 3.788 / 2.310 / 1.474 / 1.000 / 0.701 / reverse 5.397
Rear axle gear ratio	Ratio	4.875

CHASSIS		
Front axle / rear axle	Model	F350T / R035T
	Load-bearing capacity front/rear	3100 kg / 6000 kg
Tyres		205/75R17.5C 124/122 M
		Twin tyres at rear, tyres with optimised rolling resistance
Wheel		17.5 x 6.00 - 127 - 9t - 6 wheel bolts
Steering		Right-hand drive
		Recirculating-ball steering with power assist, tilting telescopic steering column with steering-wheel lock
Brake	Service brake	Hydraulic with vacuum power assist, dual-circuit with load-dependent brake proportioning valve at rear wheels
	Front / rear	Disc brake (252 × 40)
	Parking brake	Mechanical expanding brake on drive shaft at rear of transmission
	Auxiliary brake	Exhaust brake (50 kW)
Suspension	Front / rear	Semi-elliptic leaf spring with shock absorber and stabiliser
Frame	Type	Ladder-type frame with reinforcements and crossmembers
Fuel tank capacity		100 litres
Electrical system	Batteries	12 V (100 Ah - 760 A(EN))

FUSO – A Daimler Truck Group Brand

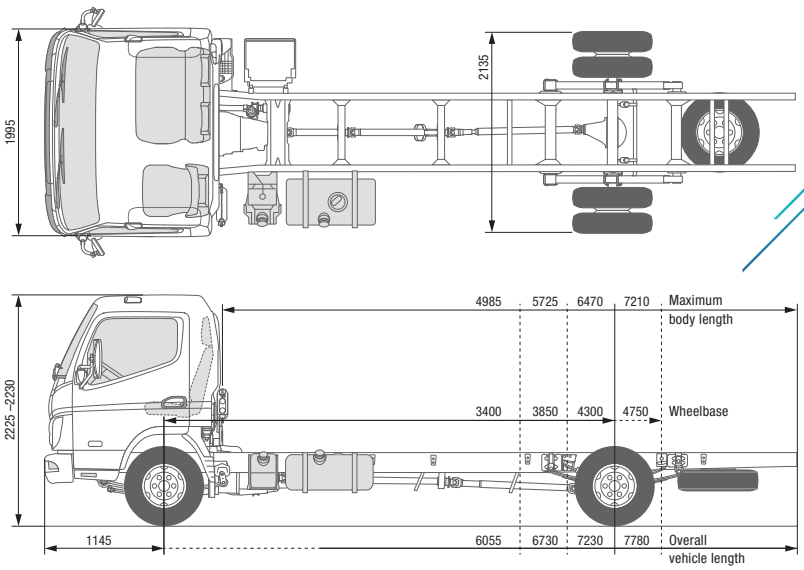

CANTER 9C18 DUONIC® 2.0
LEFT-HAND DRIVE

MODEL / VEHICLE TYPE		9C18			
Cab type / crew		Comfort, single cab / 3			
Model variant		46927512	46927712	46927812	46927915
FUSO model code		FECX1EL3SEUC	FECX1GL3SEUC	FECX1HL3SEUC	FECX1KL3SEUC
DIMENSIONS [MM]					
Wheelbase		3400	3850	4300	4750
Overall length		5940	6690	7190	7740
Cab length		1625			
Width overall		2135			
Cab width		1995			
Height overall		2230		2225	
Track width	Front / rear	1665 / 1670			
Frame height (at end of frame)		845	850	845	
Ground clearance		185			
Cab to rear axle		2875	3325	3775	4225
Cab to end of frame		4345	5020	5520	6070
Maximum body length**		4985	5725	6470	7210
Frame width		850			
Front overhang		1145			
Rear overhang		1395	1695	1745	1845
Front axle to front of body		625			
Recommended distance cab to body		100			
WEIGHTS [KG]					
Empty weight*		2615	2645	2680	2700
	Front* / rear*	1730 / 885	1710 / 935	1740 / 940	1760 / 940
Gross vehicle weight / gross combination weight		8550 / 12050			
Axle loads*	Front / rear	3100 / 5800			
Towed weight	Braked / unbraked	3500 / 750			
Chassis load bearing capacity*		5935	5905	5870	5850
CALCULATED OUTPUT					
Maximum speed	km/h	129			
Minimum turning circle [m]	Kerb to kerb	12.2	13.8	15.2	16.6
	Wall to wall	13.8	15.2	16.6	18.0

* The weight refers to the base vehicle (European series, including coolant, oil, 90% fuel, tyre sealant, tools and driver with 75 kg) without optional equipment. If any optional equipment is added, the weight changes accordingly. ** Calculated maximum value which should be checked depending on the body and application.
Subject to change without notice. All data is approximate. The illustrations may contain accessories and items of optional equipment which are not part of the standard specification. The data sheet may contain product types and support services not available in certain countries.

FUSO – A Daimler Truck Group Brand

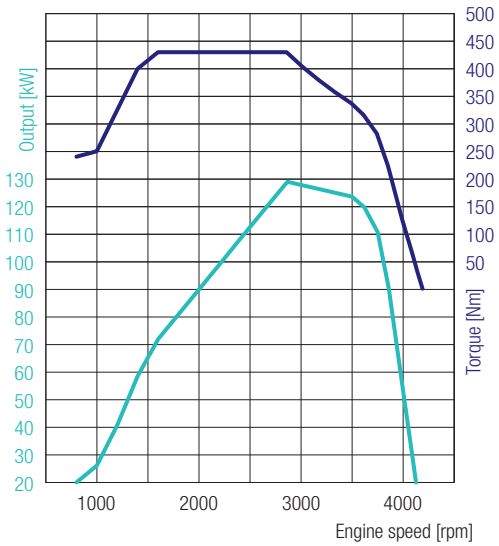

CANTER 9C18 DUONIC® 2.0
LEFT-HAND DRIVE

4P10 – 129 kW (175 PS)
430 Nm@1600 rpm
129 kW@2865 rpm

ENGINE (EURO VI)				
Type		Water-cooled four-stroke diesel engine with turbocharger, intercooler and direct injection		
No. of cylinders		4/in-line		
Capacity		2998 cm³		
Peak output		129 kW (175 hp) / 2865 rpm		
Rated torque		430 Nm / 1600 rpm		
Diesel particulate filter		Service life approx. 300,000 km		
Alternator		Alternating current 12 V, 140 A		
Exhaust gas aftertreatment		SCR + DPF		
PTO (optional)	Type	31 kW with flange	62 kW with flange	31 kW for directly connected pumps
	Torque at peak output [Nm]:	196 Nm	392 Nm	196 Nm
	Gear ratios	1:0.655	1:0.727	1:0.651
	Engine speed at peak output	1500 rpm		
POWERTRAIN				
Transmission	Model	DUONIC® 2.0: Automated transmission with dual clutch, 6 forward speeds and 1 reverse gear		
	Gear ratio	5.397 / 3.788 / 2.310 / 1.474 / 1.000 / 0.701 / reverse 5.397		
Rear axle gear ratio	Ratio	5.714		
CHASSIS				
Front axle / rear axle	Model	F350T / R035T		
	Load-bearing capacity front/rear	3100 kg / 5800 kg		
Tyres		205/75R17.5C 124/122M		
		Twin tyres at rear, tyres with optimised rolling resistance		
Wheel		17.5 x 6.00 - 127 - 6 wheel bolts		
Steering		Left-hand drive		
		Recirculating-ball steering with power assist, tilting telescopic steering column with steering-wheel lock		
Brake	Service brake	Hydraulic with vacuum power assist, dual-circuit with load-dependent brake proportioning valve at rear wheels		
	Front / rear	Disc brake (252 × 40)		
	Parking brake	Mechanical expanding brake on drive shaft at rear of transmission		
	Auxiliary brake	Exhaust brake (50 kW)		
Suspension	Front / rear	Semi-elliptic leaf spring with shock absorber and stabiliser		
Frame	Type	Ladder-type frame with reinforcements and crossmembers		
Fuel tank capacity		100 litres		
Electrical system	Batteries	12 V (100 Ah - 760 A(EN))		

FUSO – A Daimler Truck Group Brand

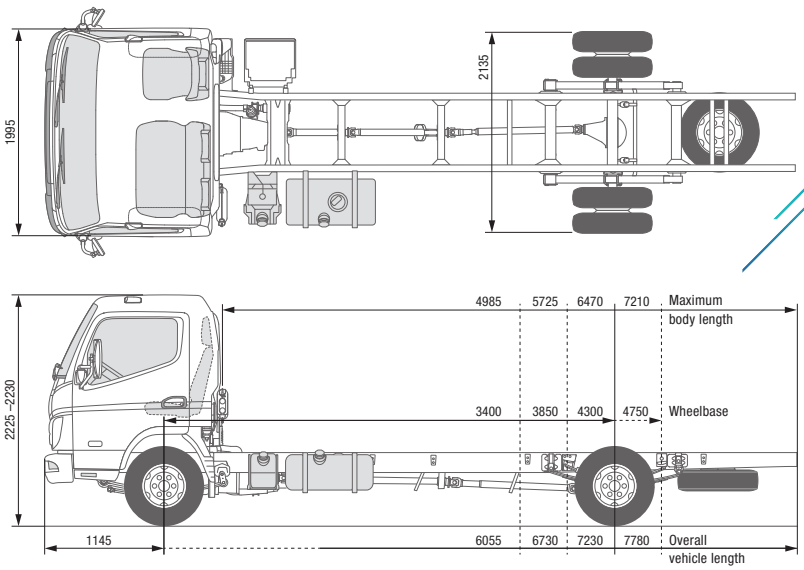

CANTER 9C18 DUONIC® 2.0
RIGHT-HAND DRIVE

MODEL / VEHICLE TYPE		9C18			
Cab type / crew		Comfort, single cab / 3			
Model variant		46927522	46927722	46927822	46927925
FUSO model code		FECX1ER3SEUC	FECX1GR3SEUC	FECX1HR3SEUC	FECX1KR3SEUC
DIMENSIONS [MM]					
Wheelbase		3400	3850	4300	4750
Overall length		5940	6690	7190	7740
Cab length		1625			
Width overall		2135			
Cab width		1995			
Height overall		2230		2225	
Track width	Front / rear	1665 / 1670			
Frame height (at end of frame)		845	850	845	
Ground clearance		185			
Cab to rear axle		2875	3325	3775	4225
Cab to end of frame		4345	5020	5520	6070
Maximum body length**		4985	5725	6470	7210
Frame width		850			
Front overhang		1145			
Rear overhang		1395	1695	1745	1845
Front axle to front of body		625			
Recommended distance cab to body		100			
WEIGHTS [KG]					
Empty weight*		2615	2645	2680	2700
	Front* / rear*	1730 / 885	1710 / 935	1740 / 940	1760 / 940
Gross vehicle weight / gross combination weight		8550 / 12050			
Axle loads*	Front / rear	3100 / 5800			
Towed weight	Braked / unbraked	3500 / 750			
Chassis load bearing capacity*		5935	5905	5870	5850
CALCULATED OUTPUT					
Maximum speed	km/h	129			
Minimum turning circle [m]	Kerb to kerb	12.2	13.8	15.2	16.6
	Wall to wall	13.8	15.2	16.6	18.0

* The weight refers to the base vehicle (European series, including coolant, oil, 90% fuel, tyre sealant, tools and driver with 75 kg) without optional equipment. If any optional equipment is added, the weight changes accordingly. ** Calculated maximum value which should be checked depending on the body and application.
Subject to change without notice. All data is approximate. The illustrations may contain accessories and items of optional equipment which are not part of the standard specification. The data sheet may contain product types and support services not available in certain countries.

FUSO – A Daimler Truck Group Brand

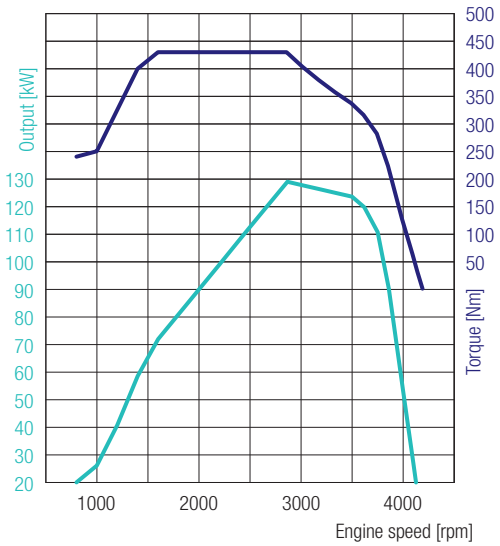

CANTER 9C18 DUONIC® 2.0
RIGHT-HAND DRIVE

4P10 – 129 kW (175 PS)
430 Nm@1600 rpm
129 kW@2865 rpm

ENGINE (EURO VI)				
Type		Water-cooled four-stroke diesel engine with turbocharger, intercooler and direct injection		
No. of cylinders		4/in-line		
Capacity		2998 cm³		
Peak output		129 kW (175 hp) / 2865 rpm		
Rated torque		430 Nm / 1600 rpm		
Diesel particulate filter		Service life approx. 300,000 km		
Alternator		Alternating current 12 V, 140 A		
Exhaust gas aftertreatment		SCR + DPF		
PTO (optional)	Type	31 kW with flange	62 kW with flange	31 kW for directly connected pumps
	Torque at peak output [Nm]:	196 Nm	392 Nm	196 Nm
	Gear ratios	1:0.655	1:0.727	1:0.651
	Engine speed at peak output	1500 rpm		
POWERTRAIN				
Transmission	Model	DUONIC® 2.0: Automated transmission with dual clutch, 6 forward speeds and 1 reverse gear		
	Gear ratio	5.397 / 3.788 / 2.310 / 1.474 / 1.000 / 0.701 / reverse 5.397		
Rear axle gear ratio	Ratio	5.714		
CHASSIS				
Front axle / rear axle	Model	F350T / R035T		
	Load-bearing capacity front/rear	3100 kg / 5800 kg		
Tyres		205/75R17.5C 124/122M		
		Twin tyres at rear, tyres with optimised rolling resistance		
Wheel		17.5 x 6.00 - 127 - 6 wheel bolts		
Steering		Right-hand drive		
		Recirculating-ball steering with power assist, tilting telescopic steering column with steering-wheel lock		
Brake	Service brake	Hydraulic with vacuum power assist, dual-circuit with load-dependent brake proportioning valve at rear wheels		
	Front / rear	Disc brake (252 × 40)		
	Parking brake	Mechanical expanding brake on drive shaft at rear of transmission		
	Auxiliary brake	Exhaust brake (50 kW)		
Suspension	Front / rear	Semi-elliptic leaf spring with shock absorber and stabiliser		
Frame	Type	Ladder-type frame with reinforcements and crossmembers		
Fuel tank capacity		100 litres		
Electrical system	Batteries	12 V (100 Ah - 760 A(EN))		

FUSO – A Daimler Truck Group Brand

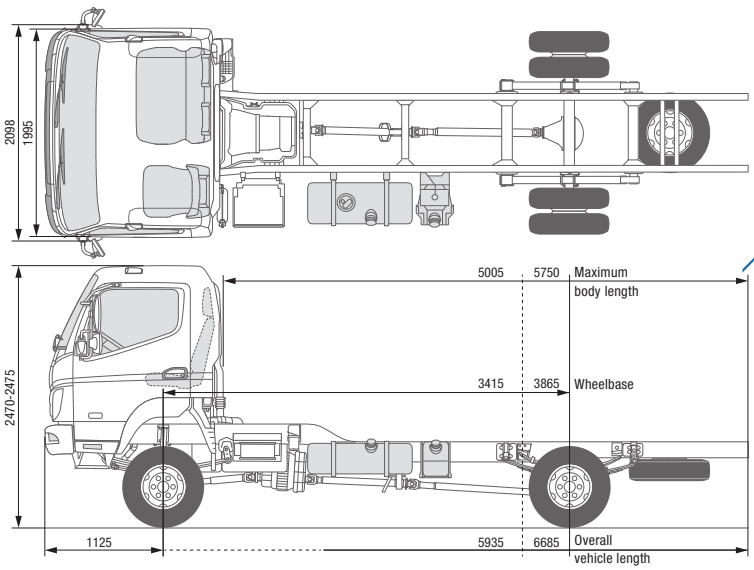

CANTER 6C18 4×4
LEFT-HAND DRIVE

MODEL / VEHICLE TYPE		6C18 4×4	
Cab type / crew		Comfort, single cab / 3	
Model variant		46911512	46911712
FUSO model code		FGB71EL6SEUY	FGB71GL6SEUY
DIMENSIONS [MM]			
Wheelbase		3415	3865
Overall length		5935	6685
Cab length		1625	
Width overall		2098	
Cab width		1995	
Height overall		2475	2470
Track width	Front / rear	1665 / 1560	
Frame height (at end of frame)		815	810
Cab to rear axle		2890	3340
Cab to end of frame		4285	5035
Maximum body length**		5005	5750
Frame width		750	
Front overhang		1130	
Rear overhang		1395	1695
Front axle to front of body		625	
Recommended distance cab to body		100	
WEIGHTS [KG]			
Empty weight*		2825	2845
	Front* / rear*	1860 / 965	1825 / 1020
Minimum vehicle weight		2905	
Gross vehicle weight / gross combination weight		6500 / 10000	
Axle loads*	Front / rear	2800 / 5125	2800 / 5070
Towed weight	Braked / unbraked	3500 / 750	
Chassis load bearing capacity*		3675	3655
CALCULATED OUTPUT			
Maximum speed	km/h	130	
Minimum turning circle [m]	Kerb to kerb	13.5	15.1
	Wall to wall	14.9	16.5
GROUND CLEARANCES AND APPROACH/DEPARTURE ANGLES			
Ground clearance under axles	Front / rear	210 / 185	
Approach/departure angles	front / rear	35° / 25°	

As of July 2024

FUSO – A Daimler Truck Group Brand

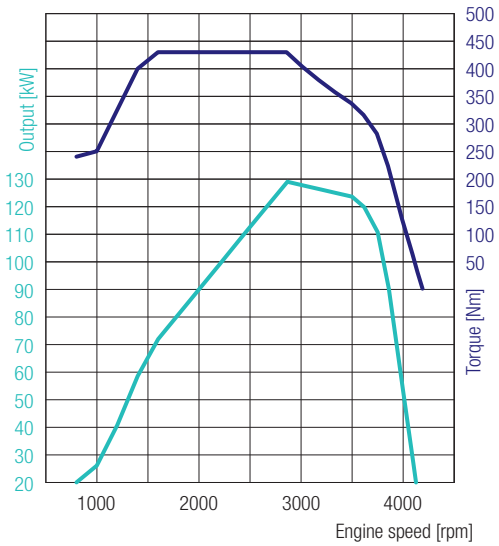

CANTER 6C18 4×4
LEFT-HAND DRIVE

4P10 – 129 kW (175 PS)
430 Nm@1600 rpm
129 kW@2865 rpm

ENGINE (EURO VI)			
Type		Water-cooled four-stroke diesel engine with turbocharger, intercooler and direct injection	
No. of cylinders		4/in-line	
Capacity		2998 cm³	
Peak output		129 kW (175 hp) / 2865 rpm	
Rated torque		430 Nm / 1600 rpm	
Diesel particulate filter		Service life approx. 300,000 km	
Alternator		Alternating current 12 V, 140 A	
Exhaust gas aftertreatment		SCR + DPF	
PTO (optional)	Type	31 kW with flange	31 kW for directly connected pumps
	Torque at peak output [Nm]:	196 Nm	
	Gear ratios	1:0.644	1:0.638
	Engine speed at peak output	1500 rpm	
POWERTRAIN			
Transmission / all-wheel drive	Type	Manual gearbox, 5 forward gears, 1 reverse gear	
	Gear ratio	5.494 / 3.193 / 1.689 / 1.000 / 0.723 / reverse 5.494	
	Torque split 4×4	60% front / 40% rear	
Rear axle gear ratio	Ratio	4.875	
CHASSIS			
Front axle / rear axle	Model	F200TW / R035T	
	Load-bearing capacity front/rear	2800 kg / 5000 kg (3415 mm)	2800 kg / 4940 kg (3865 mm)
Tyres		205/75R17.5C 124/122 M	
		Twin tyres at rear, tyres with optimised rolling resistance	
Wheel		17.5 x 6.00 - 127 - 9t - 6 wheel bolts	
Steering		Left-hand drive	
		Recirculating-ball steering with power assist, tilting telescopic steering column with steering-wheel lock	
Brake	Service brake	Hydraulic with vacuum power assist, dual-circuit with load-dependent brake proportioning valve at rear wheels	
	Front / rear	Drum brake (320 × 75.2L) / drum brake (320 × 110)	
	Parking brake	Mechanical expanding brake on drive shaft at rear of transmission	
	Auxiliary brake	Exhaust brake (50 kW)	
Suspension	Front / rear	Semi-elliptic leaf spring with shock absorber and stabiliser	
Frame	Type	Ladder-type frame with reinforcements and crossmembers	
Fuel tank capacity		100 litres	
Electrical system	Batteries	12 V (100 Ah - 760 A(EN))	

* The weight refers to the base vehicle (European series, including coolant, oil, 90% fuel, tyre sealant, tools and driver with 75 kg) without optional equipment. If any optional equipment is added, the weight changes accordingly. ** Calculated maximum value which should be checked depending on the body and application.
Subject to change without notice. All data is approximate. The illustrations may contain accessories and items of optional equipment which are not part of the standard specification. The data sheet may contain product types and support services not available in certain countries.

FUSO – A Daimler Truck Group Brand

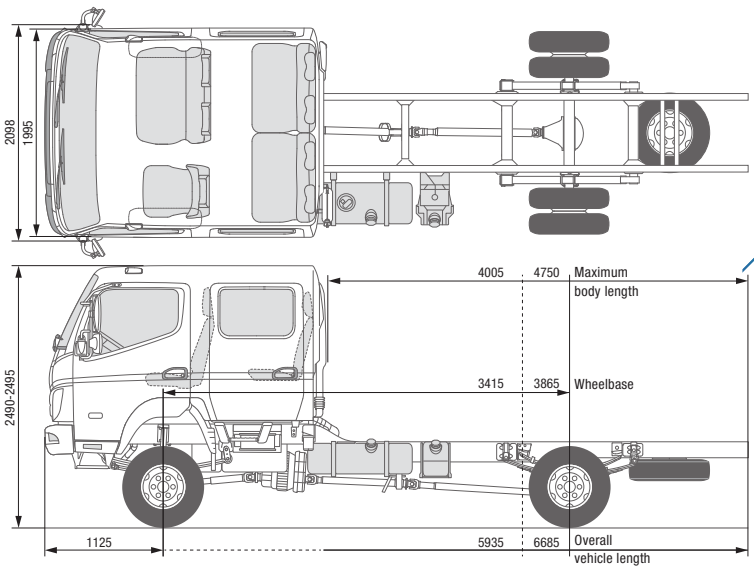

CANTER 6C18D 4×4
LEFT-HAND DRIVE

MODEL / VEHICLE TYPE		6C18D 4×4	
Cab type / crew		Comfort, crew cab / 7	
Model variant		46911514	46911714
FUSO model code		FGB71EL6WEUY	FGB71GL6WEUY
DIMENSIONS [MM]			
Wheelbase		3415	3865
Overall length		5935	6685
Cab length		2625	
Width overall		2098	
Cab width		1995	
Height overall		2495	2490
Track width	Front / rear	1665 / 1560	
Frame height (at end of frame)		810	
Cab to rear axle		1890	2340
Cab to end of frame		3285	4035
Maximum body length**		4005	4750
Frame width		750	
Front overhang		1130	
Rear overhang		1395	1695
Front axle to front of body		1625	
Recommended distance cab to body		100	
WEIGHTS [KG]			
Empty weight*		3050	3065
	Front* / rear*	1930 / 1120	2035 / 1030
Minimum vehicle weight		3105	
Gross vehicle weight / gross combination weight		6500 / 10000	
Axle loads*	Front / rear	2800 / 5125	2800 / 5070
Towed weight	Braked / unbraked	3500 / 750	
Chassis load bearing capacity*		3450	3435
CALCULATED OUTPUT			
Maximum speed	km/h	130	
Minimum turning circle [m]	Kerb to kerb	13.5	15.1
	Wall to wall	14.9	16.5
GROUND CLEARANCES AND APPROACH/DEPARTURE ANGLES			
Ground clearance under axles	Front / rear	210 / 185	
Approach/departure angles	Front / rear	35° / 25°	

As of July 2024

FUSO – A Daimler Truck Group Brand

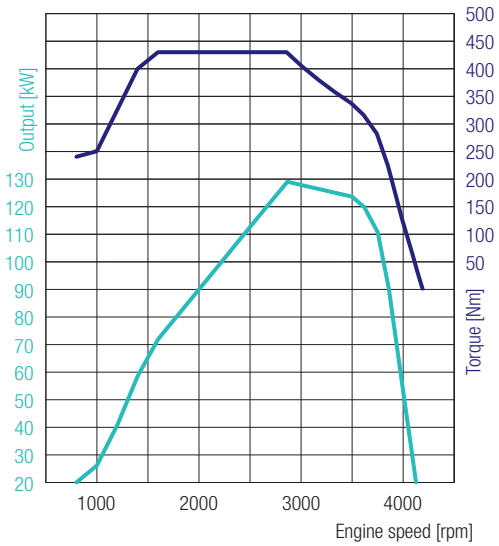

CANTER 6C18D 4×4
LEFT-HAND DRIVE

4P10 – 129 kW (175 PS)
430 Nm@1600 rpm
129 kW@2865 rpm

ENGINE (EURO VI)			
Type		Water-cooled four-stroke diesel engine with turbocharger, intercooler and direct injection	
No. of cylinders		4/in-line	
Capacity		2998 cm³	
Peak output		129 kW (175 hp) / 2865 rpm	
Rated torque		430 Nm / 1600 rpm	
Diesel particulate filter		Service life approx. 300,000 km	
Alternator		Alternating current 12 V, 140 A	
Exhaust gas aftertreatment		SCR + DPF	
PTO (optional)	Type	31 kW with flange	31 kW for directly connected pumps
	Torque at peak output [Nm]:	196 Nm	
	Gear ratios	1:0.644	1:0.638
	Engine speed at peak output	1500 rpm	
POWERTRAIN			
Transmission / all-wheel drive	Type	Manual gearbox, 5 forward gears, 1 reverse gear	
	Gear ratio	5.494 / 3.193 / 1.689 / 1.000 / 0.723 / reverse 5.494	
	Torque split 4×4	60% front / 40% rear	
Rear axle gear ratio	Ratio	4.875	
CHASSIS			
Front axle / rear axle	Model	F200TW / R035T	
	Load-bearing capacity front/rear	2800 kg / 5000 kg (3415 mm)	2800 kg / 5070 kg (3865 mm)
Tyres		205/75R17.5C 124/122 M	
		Twin tyres at rear, tyres with optimised rolling resistance	
Wheel		17.5 x 6.00 - 127 - 9t - 6 wheel bolts	
Steering		Left-hand drive	
		Recirculating-ball steering with power assist, tilting telescopic steering column with steering-wheel lock	
Brake	Service brake	Hydraulic with vacuum power assist, dual-circuit with load-dependent brake proportioning valve at rear wheels	
	Front / rear	Drum brake (320 × 75.2L) / drum brake (320 × 110)	
	Parking brake	Mechanical expanding brake on drive shaft at rear of transmission	
	Auxiliary brake	Exhaust brake (50 kW)	
Suspension	Front / rear	Semi-elliptic leaf spring with shock absorber and stabiliser	
Frame	Type	Ladder-type frame with reinforcements and crossmembers	
Fuel tank capacity		100 litres	
Electrical system	Batteries	12 V (100 Ah - 760 A(EN))	

* The weight refers to the base vehicle (European series, including coolant, oil, 90% fuel, tyre sealant, tools and driver with 75 kg) without optional equipment. If any optional equipment is added, the weight changes accordingly. ** Calculated maximum value which should be checked depending on the body and application.
Subject to change without notice. All data is approximate. The illustrations may contain accessories and items of optional equipment which are not part of the standard specification. The data sheet may contain product types and support services not available in certain countries.

FUSO – A Daimler Truck Group Brand

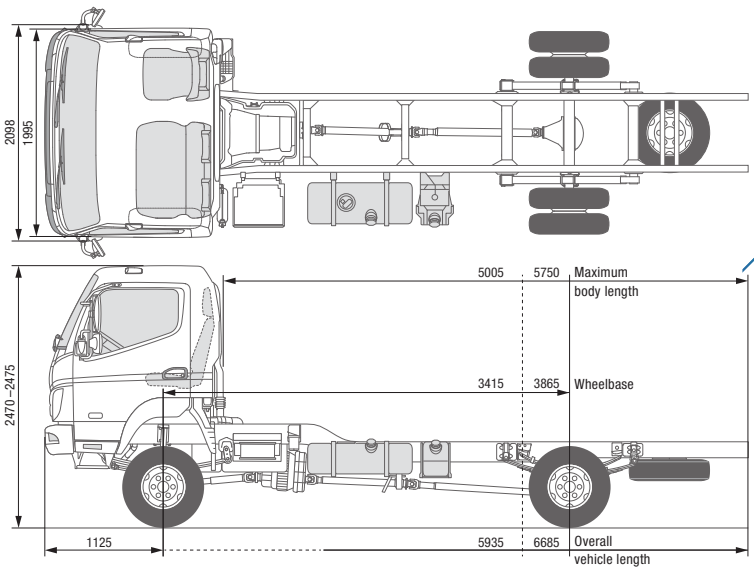

CANTER 6C18 4×4
RIGHT-HAND DRIVE

MODEL / VEHICLE TYPE		6C18 4×4	
Cab type / crew		Comfort, single cab / 3	
Model variant		46911522	46911722
FUSO model code		FGB71ER6SEUY	FGB71GR6SEUY
DIMENSIONS [MM]			
Wheelbase		3415	3865
Overall length		5935	6685
Cab length		1625	
Width overall		2098	
Cab width		1995	
Height overall		2475	2470
Track width	Front / rear	1665 / 1560	
Frame height (at end of frame)		815	810
Cab to rear axle		2890	3340
Cab to end of frame		4285	5035
Maximum body length**		5005	5750
Frame width		750	
Front overhang		1130	
Rear overhang		1395	1695
Front axle to front of body		625	
Recommended distance cab to body		100	
WEIGHTS [KG]			
Empty weight*		2825	2845
	Front* / rear*	1860 / 965	1825 / 1020
Minimum vehicle weight		2905	
Gross vehicle weight / gross combination weight		6500 / 10000	
Axle loads*	Front / rear	2800 / 5125	2800 / 5070
Towed weight	Braked / unbraked	3500 / 750	
Chassis load bearing capacity*		3675	3655
CALCULATED OUTPUT			
Maximum speed	km/h	130	
Minimum turning circle [m]	Kerb to kerb	13.5	15.1
	Wall to wall	14.9	16.5
GROUND CLEARANCES AND APPROACH/DEPARTURE ANGLES			
Ground clearance under axles	Front / rear	210 / 185	
Approach/departure angles	front / rear	35° / 25°	

As of July 2024

FUSO – A Daimler Truck Group Brand

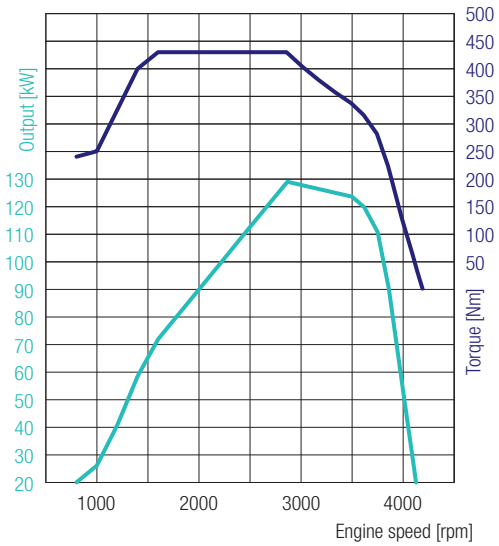

CANTER 6C18 4×4
RIGHT-HAND DRIVE

4P10 – 129 kW (175 PS)
430 Nm@1600 rpm
129 kW@2865 rpm

ENGINE (EURO VI)			
Type		Water-cooled four-stroke diesel engine with turbocharger, intercooler and direct injection	
No. of cylinders		4/in-line	
Capacity		2998 cm³	
Peak output		129 kW (175 hp) / 2865 rpm	
Rated torque		430 Nm / 1600 rpm	
Diesel particulate filter		Service life approx. 300,000 km	
Alternator		Alternating current 12 V, 140 A	
Exhaust gas aftertreatment		SCR + DPF	
PTO (optional)	Type	31 kW with flange	31 kW for directly connected pumps
	Torque at peak output [Nm]:	196 Nm	
	Gear ratios	1:0.644	1:0.638
	Engine speed at peak output	1500 rpm	
POWERTRAIN			
Transmission / all-wheel drive	Type	Manual gearbox, 5 forward gears, 1 reverse gear	
	Gear ratio	5.494 / 3.193 / 1.689 / 1.000 / 0.723 / reverse 5.494	
	Torque split 4×4	60% front / 40% rear	
Rear axle gear ratio	Ratio	4.875	
CHASSIS			
Front axle / rear axle	Model	F200TW / R035T	
	Load-bearing capacity front/rear	2800 kg / 5000 kg (3415 mm)	2800 kg / 5070 kg (3865 mm)
Tyres		205/75R17.5C 124/122 M	
		Twin tyres at rear, tyres with optimised rolling resistance	
Wheel		17.5 x 6.00 - 127 - 9t - 6 wheel bolts	
Steering		Right-hand drive	
		Recirculating-ball steering with power assist, tilting telescopic steering column with steering-wheel lock	
Brake	Service brake	Hydraulic with vacuum power assist, dual-circuit with load-dependent brake proportioning valve at rear wheels	
	Front / rear	Drum brake (320 × 75.2L) / drum brake (320 × 110)	
	Parking brake	Mechanical expanding brake on drive shaft at rear of transmission	
	Auxiliary brake	Exhaust brake (50 kW)	
Suspension	Front / rear	Semi-elliptic leaf spring with shock absorber and stabiliser	
Frame	Type	Ladder-type frame with reinforcements and crossmembers	
Fuel tank capacity		100 litres	
Electrical system	Batteries	12 V (100 Ah - 760 A(EN))	

* The weight refers to the base vehicle (European series, including coolant, oil, 90% fuel, tyre sealant, tools and driver with 75 kg) without optional equipment. If any optional equipment is added, the weight changes accordingly. ** Calculated maximum value which should be checked depending on the body and application.
Subject to change without notice. All data is approximate. The illustrations may contain accessories and items of optional equipment which are not part of the standard specification. The data sheet may contain product types and support services not available in certain countries.

FUSO – A Daimler Truck Group Brand

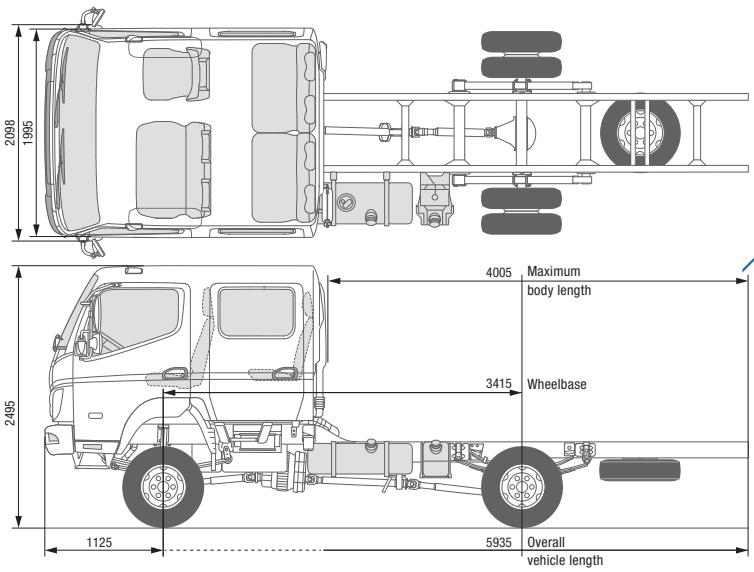

CANTER 6C18D 4×4
RIGHT-HAND DRIVE

MODEL / VEHICLE TYPE		6C18D 4×4
Cab type / crew		Comfort, crew cab / 7
Model variant		46911524
FUSO model code		FGB71ER6WEUY
DIMENSIONS [MM]		
Wheelbase		3415
Overall length		5935
Cab length		2625
Width overall		2098
Cab width		1995
Height overall		2495
Track width	Front / rear	1665 / 1560
Frame height (at end of frame)		810
Cab to rear axle		1890
Cab to end of frame		3285
Maximum body length**		4005
Frame width		750
Front overhang		1130
Rear overhang		1395
Front axle to front of body		1625
Recommended distance cab to body		100
WEIGHTS [KG]		
Empty weight*		3050
	Front* / rear*	1930 / 1120
Minimum vehicle weight		3105
Gross vehicle weight / gross combination weight		6500 / 10000
Axle loads*	Front / rear	2800 / 5125
Towed weight	Braked / unbraked	3500 / 750
Chassis load bearing capacity*		3450
CALCULATED OUTPUT		
Maximum speed	km/h	130
Minimum turning circle [m]	Kerb to kerb	13.5
	Wall to wall	14.9
GROUND CLEARANCES AND APPROACH/DEPARTURE ANGLES		
Ground clearance under axles	Front / rear	210 / 185
Approach angle	front / rear	35° / 25°

As of July 2024

FUSO – A Daimler Truck Group Brand

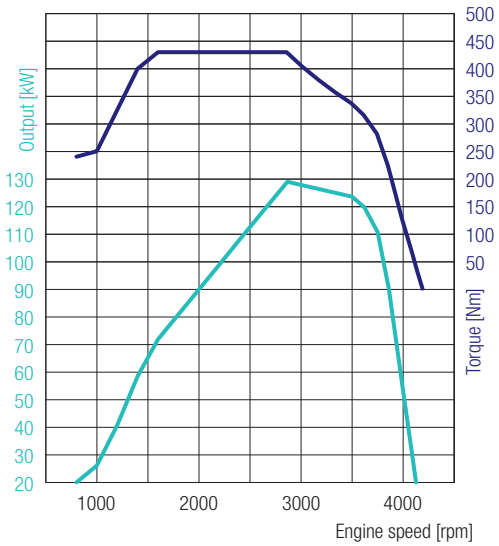

CANTER 6C18D 4×4
RIGHT-HAND DRIVE

4P10 – 129 kW (175 PS)
430 Nm@1600 rpm
129 kW@2865 rpm

ENGINE (EURO VI)			
Type		Water-cooled four-stroke diesel engine with turbocharger, intercooler and direct injection	
No. of cylinders		4/in-line	
Capacity		2998 cm³	
Peak output		129 kW (175 hp) / 2865 rpm	
Rated torque		430 Nm / 1600 rpm	
Diesel particulate filter		Service life approx. 300,000 km	
Alternator		Alternating current 12 V, 140 A	
Exhaust gas aftertreatment		SCR + DPF	
PTO (optional)	Type	31 kW with flange	31 kW for directly connected pumps
	Torque at peak output [Nm]:	196 Nm	
	Gear ratios	1:0.644	1:0.638
	Engine speed at peak output	1500 rpm	
POWERTRAIN			
Transmission / all-wheel drive	Type	Manual gearbox, 5 forward gears, 1 reverse gear	
	Gear ratio	5.494 / 3.193 / 1.689 / 1.000 / 0.723 / reverse 5.494	
	Torque split 4×4	60% front / 40% rear	
Rear axle gear ratio	Ratio	4.875	
CHASSIS			
Front axle / rear axle	Model	F200TW / R035T	
	Load-bearing capacity front/rear	2800 kg / 5000 kg	
Tyres		205/75R17.5C 124/122 M	
		Twin tyres at rear, tyres with optimised rolling resistance	
Wheel		17.5 x 6.00 - 127 - 9t - 6 wheel bolts	
Steering		Right-hand drive	
		Recirculating-ball steering with power assist, tilting telescopic steering column with steering-wheel lock	
Brake	Service brake	Hydraulic with vacuum power assist, dual-circuit with load-dependent brake proportioning valve at rear wheels	
	Front / rear	Drum brake (320 × 75.2L) / drum brake (320 × 110)	
	Parking brake	Mechanical expanding brake on drive shaft at rear of transmission	
	Auxiliary brake	Exhaust brake (50 kW)	
Suspension	Front / rear	Semi-elliptic leaf spring with shock absorber and stabiliser	
Frame	Type	Ladder-type frame with reinforcements and crossmembers	
Fuel tank capacity		100 litres	
Electrical system	Batteries	12 V (100 Ah - 760 A(EN))	

* The weight refers to the base vehicle (European series, including coolant, oil, 90% fuel, tyre sealant, tools and driver with 75 kg) without optional equipment. If any optional equipment is added, the weight changes accordingly. ** Calculated maximum value which should be checked depending on the body and application.
Subject to change without notice. All data is approximate. The illustrations may contain accessories and items of optional equipment which are not part of the standard specification. The data sheet may contain product types and support services not available in certain countries.

FUSO – A Daimler Truck Group Brand

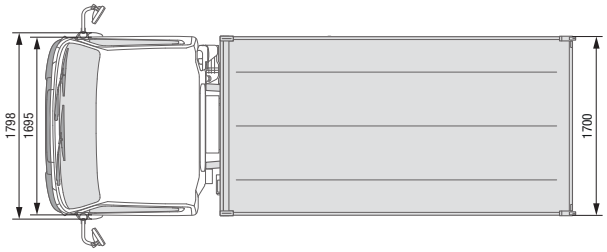

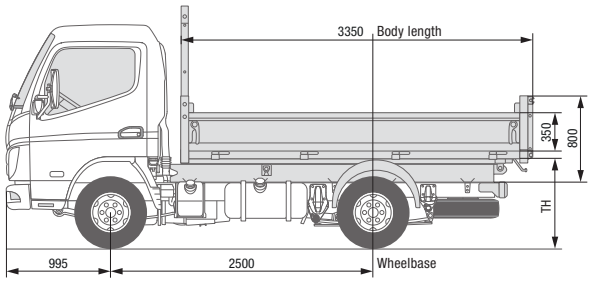

REAR TIPPER CABRETA
CANTER 3S13
CANTER 3S13 DUONIC® 2.0

VEHICLE TYPE WITH WORKS BODY		3S13	3S13 DUONIC® 2.0
Cab type / crew		Standard, single cab / 3	
Left-hand/right-hand drive		● / –	● / –
Model variant[1) 2)]		46900211	46901211
FUSO model code		FEA01BL4SEUW	FEA01BL3SEUW
Rear tipper, aluminium	MB Code / MTFE Code	–	
Rear tipper, steel	MB Code / MTFE Code	PV6 / 2F	
		CABRETA rear tipper with steel side walls, robust, puncture-proof steel floor, tipping angle 45°	
DIMENSIONS [MM]			
Wheelbase		2500	2500
Body	Length	3350	3350
	Width	1700	1700
	Floor thickness	2.5	2.5
Overall height incl. subframe		800	800
Dropside height		350	350
Loading height of tipper floor (theoretical figure)[3)]		1020	1020
Height of front wall guard incl. subframe		1705	1705
DIMENSIONS CHASSIS [MM]			
Vehicle overhang, rear		1516	1516
Vehicle overhang, front		990	990
WEIGHTS [KG]			
Kerb weight incl. body	Total	2470	2490
	Front	1444	1458
	Rear	1026	1032
Body weight	Total	530	530
Gross vehicle weight / gross combination weight		3500 / 7000	3500 / 7000
Towed weight	Braked / unbraked	3500 / 750	3500 / 750
Axle loads, chassis	Front	1950	1950
	Rear	2500	2500
Payload	Total	1030	1010
Axle load reserves, chassis	Total	950	950

● available
– not available

1) Corresponds to MB model code
2) Information for left-hand-drive version only
3) Theoretical figure

Subject to change without notice. All data is approximate. The illustrations may contain accessories and items of optional equipment which are not part of the standard specification or are not available for all of the models listed. The data sheet may contain product types and support services not available in certain countries.

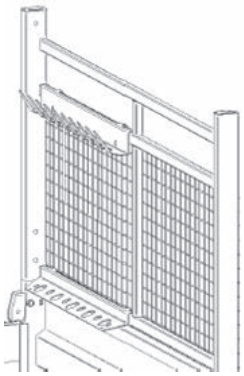

REAR TIPPER CABRETA
CANTER 3S13
CANTER 3S13 DUONIC® 2.0

VEHICLE TYPE WITH WORKS BODY		3S13	3S13 DUONIC® 2.0
Cab type / crew		Standard, single cab / 3	
Left-hand/right-hand drive		● / –	● / –
Model variant[1) 2)]		46900211	46901211
FUSO model code[2)]		FEA01BL4SEUW	FEA01BL3SEUW
Rear tipper, aluminium	MB Code / MTFE Code	–	
Rear tipper, steel	MB Code / MTFE Code	PV6 / 2F	
		CABRETA rear tipper with steel side walls, robust, puncture-proof steel floor, tipping angle 45°	
STANDARD EQUIPMENT			
		Tipper + PVC guard on side walls, protective grate for tail lamps, side underride guard, rear underride guard, trailer coupling	
OPTIONS			
Toolbox		YK0 / 2K Toolboxes on rear wall guard	
OPTIONS (COMPULSORY)			
Trailer coupling socket without rear underride guard		EX5 / ED Electrical preparation for trailer coupling	
Batteries, 2 × 12 V / 100 Ah, maintenance-free		EE9 / EL Second battery for higher availability of the electro hydraulic tipper, weight 30 kg	
Body support brackets		CR8 / FK Support brackets on frame to make it easier to mount bodies, weight approx. 6-12 kg (depending on model)	

● available
– not available

1) Corresponds to MB model code
2) Information for left-hand-drive version only

Subject to change without notice. All data is approximate. The illustrations may contain accessories and items of optional equipment which are not part of the standard specification or are not available for all of the models listed. The data sheet may contain product types and support services not available in certain countries.

FUSO – A Daimler Truck Group Brand

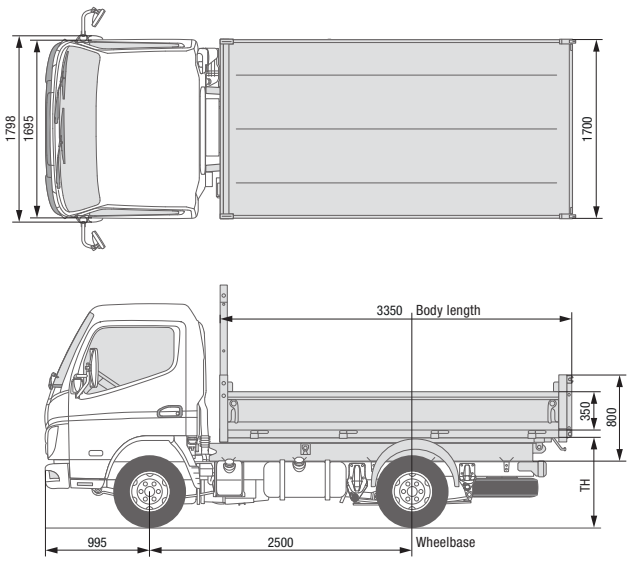

REAR TIPPER CABRETA
CANTER 3S15
CANTER 3S15 DUONIC® 2.0

VEHICLE TYPE WITH WORKS BODY		3S15	3S15 DUONIC® 2.0
Cab type / crew		Standard, single cab / 3	
Left-hand/right-hand drive		● / –	● / –
Model variant[1) 2)]		46902211	46903211
FUSO model code[2)]		FEA01BL4SEUX	FEA01BL3SEUX
Rear tipper, aluminium	MB Code / MTFE Code	–	
Rear tipper, steel	MB Code / MTFE Code	PV6 / 2F CABRETA rear tipper with steel side walls, robust, puncture-proof steel floor, tipping angle 45°	
DIMENSIONS [MM]			
Wheelbase		2500	2500
Body	Length	3350	3350
	Width	1700	1700
	Floor thickness	2.5	2.5
Overall height incl. subframe		800	800
Dropside height		350	350
Loading height of tipper floor (theoretical figure)[3)]		1020	1020
Height of front wall guard incl. subframe		1705	1705
DIMENSIONS CHASSIS [MM]			
Vehicle overhang, rear		1516	1516
Vehicle overhang, front		990	990
WEIGHTS [KG]			
Kerb weight incl. body	Total	2470	2490
	Front	1442	1463
	Rear	1128	1027
Body weight	Total	530	530
Gross vehicle weight / gross combination weight		3500 / 7000	3500 / 7000
Towed weight	Braked / unbraked	3500 / 750	3500 / 750
Axle loads, chassis	Front	1950	1950
	Rear	2500	2500
Payload	Total	1030	1010
Axle load reserves, chassis	Total	950	950

● available
– not available

1) Corresponds to MB model code
2) Information for left-hand-drive version only
3) Theoretical figure

Subject to change without notice. All data is approximate. The illustrations may contain accessories and items of optional equipment which are not part of the standard specification or are not available for all of the models listed. The data sheet may contain product types and support services not available in certain countries.

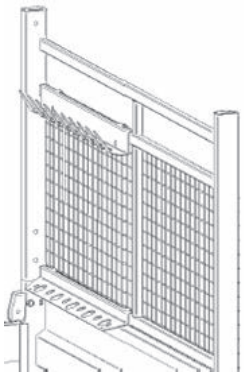

REAR TIPPER CABRETA
CANTER 3S15
CANTER 3S15 DUONIC® 2.0

VEHICLE TYPE WITH WORKS BODY		3S15	3S15 DUONIC® 2.0
Cab type / crew		Standard, single cab / 3	
Left-hand/right-hand drive		● / –	● / –
Model variant[1) 2)]		46902211	46903211
FUSO model code[2)]		FEA01BL4SEUX	FEA01BL3SEUX
Rear tipper, aluminium	MB Code / MTFE Code	–	
Rear tipper, steel	MB Code / MTFE Code	PV6 / 2F	
		CABRETA rear tipper with steel side walls, robust, puncture-proof steel floor, tipping angle 45°	
STANDARD EQUIPMENT			
		Tipper + PVC guard on side walls, protective grate for tail lamps, side underride guard, rear underride guard, trailer coupling	
OPTIONS			
Toolbox		YK0 / 2K Toolboxes on rear wall guard	
OPTIONS (COMPULSORY)			
Trailer coupling socket without rear underride guard		EX5 / ED Electrical preparation for trailer coupling	
Batteries, 2 × 12 V / 100 Ah, maintenance-free		EE9 / EL Second battery for higher availability of the electro hydraulic tipper, weight 30 kg	
Body support brackets		CR8 / FK Support brackets on frame to make it easier to mount bodies, weight approx. 6-12 kg (depending on model)	

● available
– not available

1) Corresponds to MB model code
2) Information for left-hand-drive version only

Subject to change without notice. All data is approximate. The illustrations may contain accessories and items of optional equipment which are not part of the standard specification or are not available for all of the models listed. The data sheet may contain product types and support services not available in certain countries.

FUSO – A Daimler Truck Group Brand

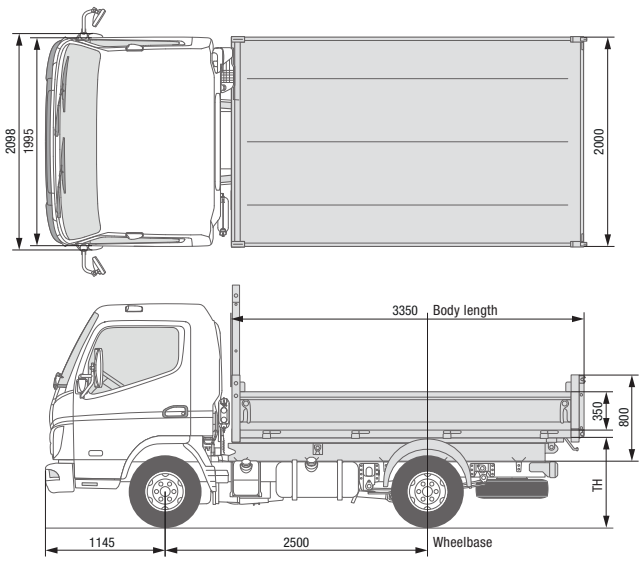

REAR TIPPER CABRETA
CANTER 3C13
CANTER 3C13 DUONIC® 2.0

VEHICLE TYPE WITH WORKS BODY		3C13	3C13 DUONIC® 2.0
Cab type / crew		Comfort, standard, single cab / 3	
Left-hand/right-hand drive		● / ●	● / ●
Model variant[1) 2)]		46904211	46905211
FUSO model code[2)]		FEB01BL4SEUW	FEB01BL3SEUW
Rear tipper, aluminium	MB Code / MTFE Code	PV5 / 2G	
		CABRETA rear tipper with reinforced aluminium side walls, reinforced aluminium floor, tipping angle 45°	
Rear tipper, steel	MB Code / MTFE Code	PV6 / 2F	
		CABRETA rear tipper with steel side walls, robust, puncture-proof steel floor, tipping angle 45°	
DIMENSIONS [MM]			
Wheelbase		2500	2500
Body	Length	3350	3350
	Width	2000	2000
	Floor thickness[4)]	4.0 (2.5)	4.0 (2.5)
Overall height incl. subframe		800	800
Dropside height		350	350
Loading height of tipper floor (theoretical figure)[3)]		1020	1020
Height of front wall guard incl. subframe		1705	1705
DIMENSIONS CHASSIS [MM]			
Vehicle overhang, rear		1145	1145
Vehicle overhang, front		1145	1145
WEIGHTS [KG]			
Kerb weight incl. body[4)]	Total	2478 (2620)	2498 (2640)
	Front	1505 (1504)	1526 (1525)
	Rear	973 (1116)	972 (1115)
Body weight	Total	438 (580)	438 (580)
Gross vehicle weight / gross combination weight		3500 / 7000	3500 / 7000
Towed weight	Braked / unbraked	3500 / 750	3500 / 750
Axle loads, chassis	Front	1950	1950
	Rear	2500	2500
Payload[4)]	Total	1022 (880)	1002 (860)
Axle load reserves, chassis	Total	950	950

● available
– not available

1) Corresponds to MB model code
2) Information for left-hand-drive version only
3) Theoretical figure
4) Side walls in aluminium (steel)

Subject to change without notice. All data is approximate. The illustrations may contain accessories and items of optional equipment which are not part of the standard specification or are not available for all of the models listed. The data sheet may contain product types and support services not available in certain countries.

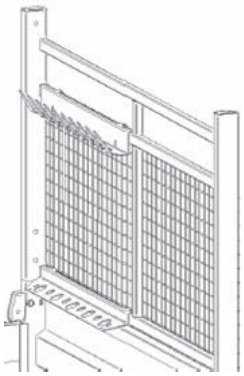

REAR TIPPER CABRETA
CANTER 3C13
CANTER 3C13 DUONIC® 2.0

VEHICLE TYPE WITH WORKS BODY		3C13	3C13 DUONIC® 2.0
Cab type / crew		Comfort, standard, single cab / 3	
Left-hand/right-hand drive		● / ●	● / ●
Model variant[1) 2)]		46904211	46905211
FUSO model code[2)]		FEB01BL4SEUW	FEB01BL3SEUW
Rear tipper, aluminium	MB Code / MTFE Code	PV5 / 2G	
		CABRETA rear tipper with reinforced aluminium side walls, reinforced aluminium floor, tipping angle 45°	
Rear tipper, steel	MB Code / MTFE Code	PV6 / 2F	
		CABRETA rear tipper with steel side walls, robust, puncture-proof steel floor, tipping angle 45°	
STANDARD EQUIPMENT			
		Tipper + PVC guard on side walls, protective grate for tail lamps, side underride guard, rear underride guard, trailer coupling	
OPTIONS			
Universal tailgate		PN7 / 2L	
		Dual tailgate	
Toolbox		YK0 / 2K	
		Toolboxes on rear wall guard	
OPTIONS (COMPULSORY)			
Trailer coupling socket without rear underride guard		EX5 / ED	
		Electrical preparation for trailer coupling	
Batteries, 2 × 12 V / 100 Ah, maintenance-free		EE9 / EL	
		Second battery for higher availability of the electro hydraulic tipper, weight 30 kg	
Body support brackets		CR8 / FK	
		Support brackets on frame to make it easier to mount bodies, weight approx. 6-12 kg (depending on model)	

● available
– not available

1) Corresponds to MB model code
2) Information for left-hand-drive version only

Subject to change without notice. All data is approximate. The illustrations may contain accessories and items of optional equipment which are not part of the standard specification or are not available for all of the models listed. The data sheet may contain product types and support services not available in certain countries.

FUSO – A Daimler Truck Group Brand

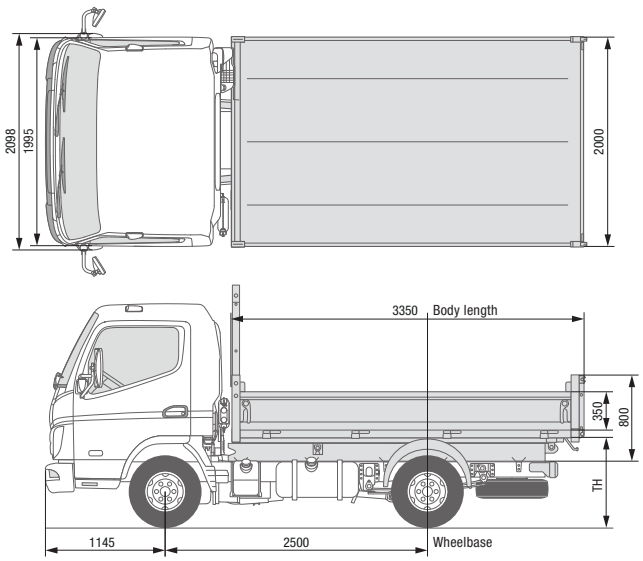

REAR TIPPER CABRETA
CANTER 3C15
CANTER 3C15 DUONIC® 2.0

VEHICLE TYPE WITH WORKS BODY		3C15	3C15 DUONIC® 2.0
Cab type / crew		Comfort, standard, single cab / 3	
Left-hand/right-hand drive		● / ●	● / ●
Model variant[1) 2)]		46906211	46907211
FUSO model code[2)]		FEB01BL4SEUX	FEB01BL3SEUX
Rear tipper, aluminium	MB Code / MTFE Code	PV5 / 2G	
		CABRETA rear tipper with reinforced aluminium side walls, reinforced aluminium floor, tipping angle 45°	
Rear tipper, steel	MB Code / MTFE Code	PV6 / 2F	
		CABRETA rear tipper with steel side walls, robust, puncture-proof steel floor, tipping angle 45°	
DIMENSIONS [MM]			
Wheelbase		2500	2500
Body	Length	3350	3350
	Width	2000	2000
	Floor thickness[4)]	4.0 (2.5)	4.0 (2.5)
Overall height incl. subframe		800	800
Dropside height		350	350
Loading height of tipper floor (theoretical figure)[3)]		1020	1020
Height of front wall guard incl. subframe		1705	1705
DIMENSIONS CHASSIS [MM]			
Vehicle overhang, rear		1145	1145
Vehicle overhang, front		1145	1145
WEIGHTS [KG]			
Kerb weight incl. body[4)]	Total	2478 (2620)	2498 (2640)
	Front	1504 (1504)	1526 (1525)
	Rear	973 (1116)	972 (1115)
Body weight	Total	438 (580)	438 (580)
Gross vehicle weight / gross combination weight		3500 / 7000	3500 / 7000
Towed weight	Braked / unbraked	3500 / 750	3500 / 750
Axle loads, chassis	Front	1950	1950
	Rear	2500	2500
Payload[4)]	Total	1022 (880)	1002 (860)
Axle load reserves, chassis	Total	950	950

● available
– not available

1) Corresponds to MB model code
2) Information for left-hand-drive version only
3) Theoretical figure
4) Side walls in aluminium (steel)

Subject to change without notice. All data is approximate. The illustrations may contain accessories and items of optional equipment which are not part of the standard specification or are not available for all of the models listed. The data sheet may contain product types and support services not available in certain countries.

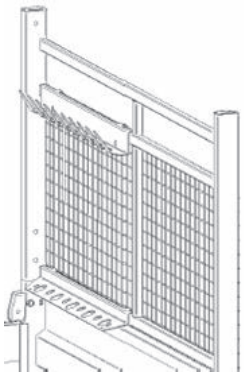

REAR TIPPER CABRETA
CANTER 3C15
CANTER 3C15 DUONIC® 2.0

VEHICLE TYPE WITH WORKS BODY		3C15	3C15 DUONIC® 2.0
Cab type / crew		Comfort, standard, single cab / 3	
Left-hand/right-hand drive		● / ●	● / ●
Model variant[1) 2)]		46906211	46907211
FUSO model code[2)]		FEB01BL4SEUX	FEB01BL3SEUX
Rear tipper, aluminium	MB Code / MTFE Code	PV5 / 2G	
		CABRETA rear tipper with reinforced aluminium side walls, reinforced aluminium floor, tipping angle 45°	
Rear tipper, steel	MB Code / MTFE Code	PV6 / 2F	
		CABRETA rear tipper with steel side walls, robust, puncture-proof steel floor, tipping angle 45°	
STANDARD EQUIPMENT			
		Tipper + PVC guard on side walls, protective grate for tail lamps, side underride guard, rear underride guard, trailer coupling	
OPTIONS			
Universal tailgate		PN7 / 2L	
		Dual tailgate	
Toolbox		YK0 / 2K	
		Toolboxes on rear wall guard	
OPTIONS (COMPULSORY)			
Trailer coupling socket without rear underride guard		EX5 / ED	
		Electrical preparation for trailer coupling	
Batteries, 2 × 12 V / 100 Ah, maintenance-free		EE9 / EL	
		Second battery for higher availability of the electro hydraulic tipper, weight 30 kg	
Body support brackets		CR8 / FK	
		Support brackets on frame to make it easier to mount bodies, weight approx. 6-12 kg (depending on model)	

● available
– not available

1) Corresponds to MB model code
2) Information for left-hand-drive version only

Subject to change without notice. All data is approximate. The illustrations may contain accessories and items of optional equipment which are not part of the standard specification or are not available for all of the models listed. The data sheet may contain product types and support services not available in certain countries.

FUSO – A Daimler Truck Group Brand

Crew cab photo to be submitted later.

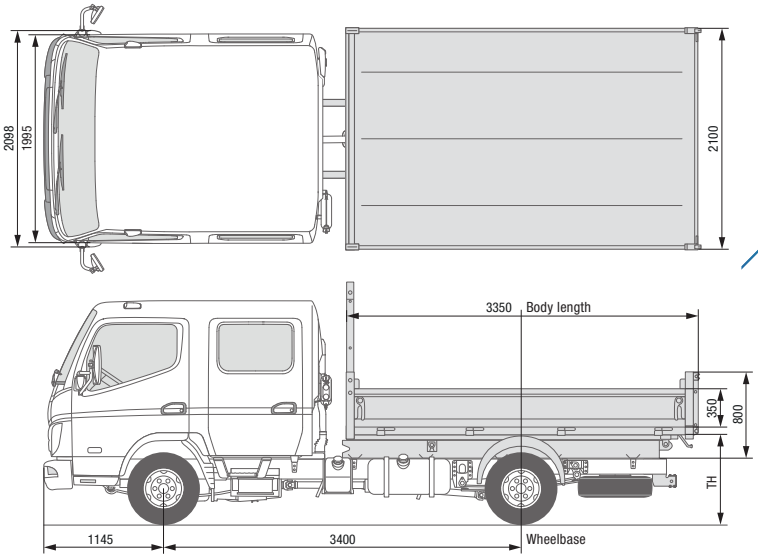

REAR TIPPER CABRETA
CANTER 3C15D
CANTER 3C15D DUONIC® 2.0

VEHICLE TYPE WITH WORKS BODY		3C15D	3C15D DUONIC® 2.0
Cab type / crew		Comfort, crew cab / 7	
Left-hand/right-hand drive		● / ●	● / ●
Model variant[1) 2)]		46906513	46907513
FUSO model code[2)]		FEB01EL4WEUX	FEB01EL3WEUX
Rear tipper, aluminium	MB Code / MTFE Code	PV5 / 2G	
		CABRETA rear tipper with reinforced aluminium side walls, reinforced aluminium floor, tipping angle 45°	
Rear tipper, steel	MB Code / MTFE Code	PV6 / 2F	
		CABRETA rear tipper with steel side walls, robust, puncture-proof steel floor, tipping angle 45°	
DIMENSIONS [MM]			
Wheelbase		3400	3400
Body	Length	3350	3350
	Width	2100	2100
	Floor thickness[4)]	4.0 (2.5)	4.0 (2.5)
Overall height incl. subframe		800	800
Dropside height		350	350
Loading height of tipper floor (theoretical figure)[3)]		995	995
Height of front wall guard incl. subframe		1700	1700
DIMENSIONS CHASSIS [MM]			
Vehicle overhang, rear		1395	1395
Vehicle overhang, front		1145	1145
WEIGHTS [KG]			
Kerb weight incl. body[4)]	Total	2733 (2875)	2753 (2895)
	Front	1666 (1752)	1682 (1767)
	Rear	1067 (1123)	1071 (1128)
Body weight	Total	438 (580)	438 (580)
Gross vehicle weight / gross combination weight		3500 / 7000	3500 / 7000
Towed weight	Braked / unbraked	3500 / 750	3500 / 750
Axle loads, chassis	Front	1950	1950
	Rear	2500	2500
Payload	Total	767 (625)	747 (605)
Axle load reserves, chassis	Total	950	950

● available
– not available

1) Corresponds to MB model code
2) Information for left-hand-drive version only
3) Theoretical figure
4) Side walls in aluminium (steel)

Subject to change without notice. All data is approximate. The illustrations may contain accessories and items of optional equipment which are not part of the standard specification or are not available for all of the models listed. The data sheet may contain product types and support services not available in certain countries.

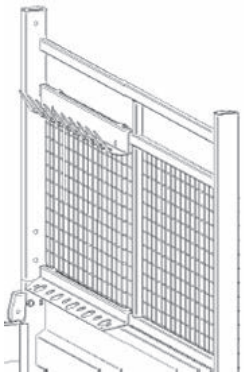

REAR TIPPER CABRETA
CANTER 3C15D
CANTER 3C15D DUONIC® 2.0

VEHICLE TYPE WITH WORKS BODY		3C15D	3C15D DUONIC® 2.0
Cab type / crew		Comfort, crew cab / 7	
Left-hand/right-hand drive		● / ●	● / ●
Model variant[1) 2)]		46906513	46907513
FUSO model code[2)]		FEB01EL4WEUX	FEB01EL3WEUX
Rear tipper, aluminium	MB Code / MTFE Code	PV5 / 2G	
		CABRETA rear tipper with reinforced aluminium side walls, reinforced aluminium floor, tipping angle 45°	
Rear tipper, steel	MB Code / MTFE Code	PV6 / 2F	
		CABRETA rear tipper with steel side walls, robust, puncture-proof steel floor, tipping angle 45°	
STANDARD EQUIPMENT			
		Tipper + PVC guard on side walls, protective grate for tail lamps, side underride guard, rear underride guard, trailer coupling	
OPTIONS			
Universal tailgate		PN7 / 2L	
		Dual tailgate	
Toolbox		YK0 / 2K	
		Toolboxes on rear wall guard	
OPTIONS (COMPULSORY)			
Trailer coupling socket without rear underrideguard		EX5 / ED	
		Electrical preparation for trailer coupling	
Batteries, 2 × 12 V / 100 Ah, maintenance-free		EE9 / EL	
		Second battery for higher availability of the electro hydraulic tipper, weight 30 kg	
Body support brackets		CR8 / FK	
		Support brackets on frame to make it easier to mount bodies, weight approx. 6-12 kg (depending on model)	

● available
– not available

1) Corresponds to MB model code
2) Information for left-hand-drive version only

Subject to change without notice. All data is approximate. The illustrations may contain accessories and items of optional equipment which are not part of the standard specification or are not available for all of the models listed. The data sheet may contain product types and support services not available in certain countries.

FUSO – A Daimler Truck Group Brand

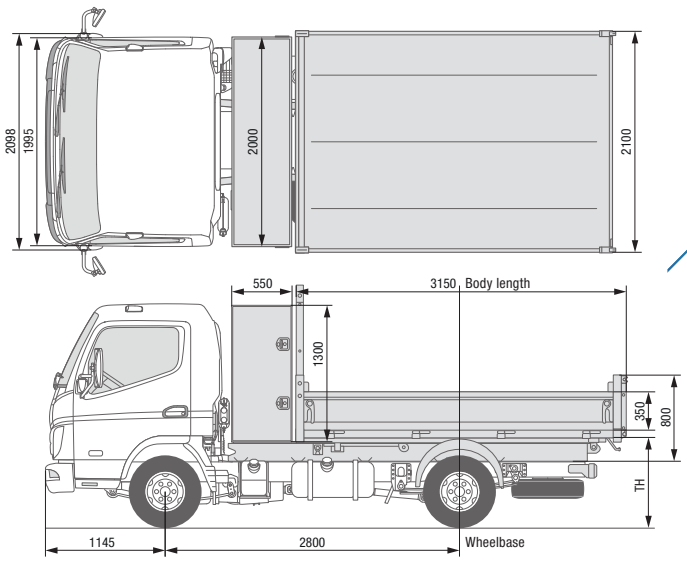

REAR TIPPER CABRETA
CANTER 3C13
CANTER 3C13 DUONIC® 2.0

VEHICLE TYPE WITH WORKS BODY		3C13	3C13 DUONIC® 2.0
Cab type / crew		Comfort, single cab / 3	
Left-hand/right-hand drive		● / ●	● / ●
Model variant[1) 2)]		46904211	46905211
FUSO model code[2)]		FEB01CL4SEUW	FEB01CL3SEUW
Rear tipper, aluminium	MB Code / MTFE Code	PV3 / 2J	
		CABRETA rear tipper with reinforced aluminium side walls and toolbox, reinforced aluminium floor, tipping angle 45°	
Rear tipper, steel	MB Code / MTFE Code	PN6 / 2H	
		CABRETA rear tipper with steel side walls and toolbox, robust, puncture-proof steel floor, tipping angle 45°	
DIMENSIONS [MM]			
Wheelbase		2800	2800
Body	Length	3150 + 616	3150 + 616
	Width	2100	2100
	Floor thickness[4)]	4.0 (2.5)	4.0 (2.5)
Overall height incl. subframe		800	800
Dropside height		350	350
Loading height of tipper floor (theoretical figure)[3)]		1020	1020
Height of front wall guard incl. subframe		1705	1705
DIMENSIONS CHASSIS [MM]			
Vehicle overhang, rear		1195	1195
Vehicle overhang, front		1145	1145
WEIGHTS [KG]			
Kerb weight incl. body[4)]	Total	2568 (2765)	2593 (2790)
	Front	1581 (1583)	1588 (1611)
	Rear	987 (1182)	1005 (1179)
Body weight	Total	523 (720)	523 (720)
Gross vehicle weight / gross combination weight		3500 / 7000	3500 / 7000
Towed weight	Braked / unbraked	3500 / 750	3500 / 750
Axle loads, chassis	Front	1950	1950
	Rear	2500	2500
Payload[4)]	Total	932 (735)	907 (710)
Axle load reserves, chassis	Total	950	950

● available
– not available

1) Corresponds to MB model code
2) Information for left-hand-drive version only
3) Theoretical figure
4) Side walls in aluminium (steel)

Subject to change without notice. All data is approximate. The illustrations may contain accessories and items of optional equipment which are not part of the standard specification or are not available for all of the models listed. The data sheet may contain product types and support services not available in certain countries.

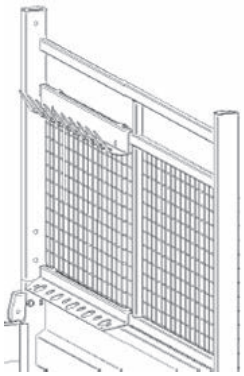

REAR TIPPER CABRETA
CANTER 3C13
CANTER 3C13 DUONIC® 2.0

VEHICLE TYPE WITH WORKS BODY		3C13	3C13 DUONIC® 2.0
Cab type / crew		Comfort, single cab / 3	
Left-hand/right-hand drive		● / ●	● / ●
Model variant[1) 2)]		46904211	46905211
FUSO model code[2)]		FEA01BL4SEUW	FEA01BL3SEUW
Rear tipper, aluminium	MB Code / MTFE Code	PV3 / 2J	
		CABRETA rear tipper with reinforced aluminium side walls and toolbox, reinforced aluminium floor, tipping angle 45°	
Rear tipper, steel	MB Code / MTFE Code	PN6 / 2H	
		CABRETA rear tipper with steel side walls and toolbox, robust, puncture-proof steel floor, tipping angle 45°	
STANDARD EQUIPMENT			
		Tipper + PVC guard on side walls, protective grate for tail lamps, side underride guard, rear underride guard, trailer coupling	
OPTIONS			
Universal tailgate		PN7 / 2L	
		Dual tailgate	
Toolbox		YK0 / 2K	
		Toolboxes on rear wall guard	
OPTIONS (COMPULSORY)			
Trailer coupling socket without rear underride guard		EX5 / ED	
		Electrical preparation for trailer coupling	
Batteries, 2 × 12 V / 100 Ah, maintenance-free		EE9 / EL	
		Second battery for higher availability of the electro hydraulic tipper, weight 30 kg	
Body support brackets		CR8 / FK	
		Support brackets on frame to make it easier to mount bodies, weight approx. 6-12 kg (depending on model)	

● available
– not available

1) Corresponds to MB model code
2) Information for left-hand-drive version only

Subject to change without notice. All data is approximate. The illustrations may contain accessories and items of optional equipment which are not part of the standard specification or are not available for all of the models listed. The data sheet may contain product types and support services not available in certain countries.

FUSO – A Daimler Truck Group Brand

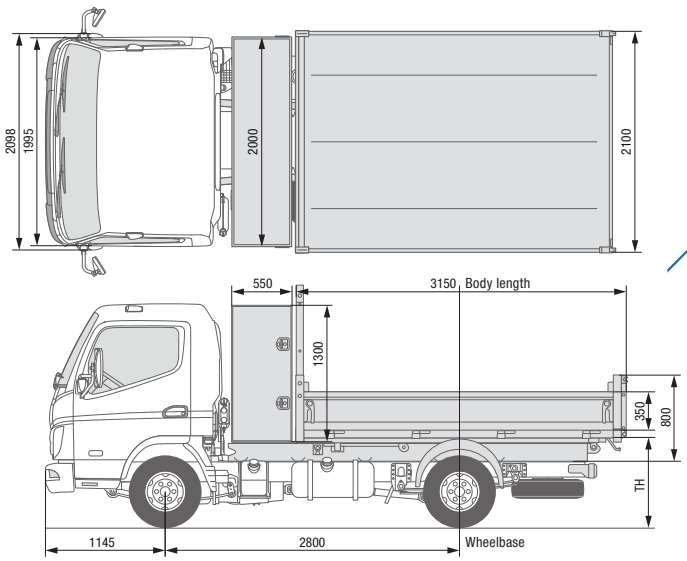

REAR TIPPER CABRETA
CANTER 3C15
CANTER 3C15 DUONIC® 2.0

VEHICLE TYPE WITH WORKS BODY		3C15	3C15 DUONIC® 2.0
Cab type / crew		Comfort, single cab / 3	
Left-hand/right-hand drive		● / ●	● / ●
Model variant[1) 2)]		46906211	46907211
FUSO model code[2)]		FEB01CL4SEUX	FEB01CL3SEUX
Rear tipper, aluminium	MB Code / MTFE Code	PV3 / 2J	
		CABRETA rear tipper with reinforced aluminium side walls and toolbox, reinforced aluminium floor, tipping angle 45°	
Rear tipper, steel	MB Code / MTFE Code	PN6 / 2H	
		CABRETA rear tipper with steel side walls and toolbox, robust, puncture-proof steel floor, tipping angle 45°	
DIMENSIONS [MM]			
Wheelbase		2800	2800
Body	Length	3150 + 616	3150 + 616
	Width	2100	2100
	Floor thickness[4)]	4.0 (2.5)	4.0 (2.5)
Overall height incl. subframe		800	800
Dropside height		350	350
Loading height of tipper floor (theoretical figure)[3)]		1020	1020
Height of front wall guard incl. subframe		1705	1705
DIMENSIONS CHASSIS [MM]			
Vehicle overhang, rear		1195	1195
Vehicle overhang, front		1145	1145
WEIGHTS [KG]			
Kerb weight incl. body[4)]	Total	2573 (2770)	2593 (2790)
	Front	1581 (1583)	1588 (1601)
	Rear	992 (1187)	1005 (1179)
Body weight	Total	523 (720)	523 (720)
Gross vehicle weight / gross combination weight		3500 / 7000	3500 / 7000
Towed weight	Braked / unbraked	3500 / 750	3500 / 750
Axle loads, chassis	Front	1950	1950
	Rear	2500	2500
Payload[4)]	Total	927 (730)	807 (710)
Axle load reserves, chassis	Total	950	950

● available
– not available

1) Corresponds to MB model code
2) Information for left-hand-drive version only
3) Theoretical figure
4) Side walls in aluminium (steel)

Subject to change without notice. All data is approximate. The illustrations may contain accessories and items of optional equipment which are not part of the standard specification or are not available for all of the models listed. The data sheet may contain product types and support services not available in certain countries.

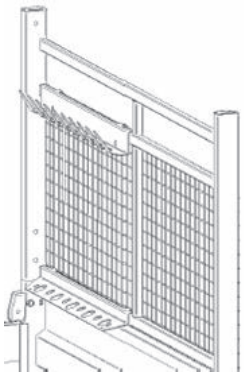

REAR TIPPER CABRETA
CANTER 3C15
CANTER 3C15 DUONIC® 2.0

VEHICLE TYPE WITH WORKS BODY		3C15	3C15 DUONIC® 2.0
Cab type / crew		Comfort, single cab / 3	
Left-hand/right-hand drive		● / ●	● / ●
Model variant[1) 2)]		46906211	46907211
FUSO model code[2)]		FEA01BL4SEUX	FEA01BL3SEUX
Rear tipper, aluminium	MB Code / MTFE Code	PV3 / 2J	
		CABRETA rear tipper with reinforced aluminium side walls and toolbox, reinforced aluminium floor, tipping angle 45°	
Rear tipper, steel	MB Code / MTFE Code	PN6 / 2H	
		CABRETA rear tipper with steel side walls and toolbox, robust, puncture-proof steel floor, tipping angle 45°	
STANDARD EQUIPMENT			
		Tipper + PVC guard on side walls, protective grate for tail lamps, side underride guard, rear underride guard, trailer coupling	
OPTIONS			
Universal tailgate		PN7 / 2L	
		Dual tailgate	
Toolbox		YK0 / 2K	
		Toolboxes on rear wall guard	
OPTIONS (COMPULSORY)			
Trailer coupling socket without rear underride guard		EX5 / ED	
		Electrical preparation for trailer coupling	
Batteries, 2 × 12 V / 100 Ah, maintenance-free		EE9 / EL	
		Second battery for higher availability of the electro hydraulic tipper, weight 30 kg	
Body support brackets		CR8 / FK	
		Support brackets on frame to make it easier to mount bodies, weight approx. 6-12 kg (depending on model)	

● available
– not available

1) Corresponds to MB model code
2) Information for left-hand-drive version only

Subject to change without notice. All data is approximate. The illustrations may contain accessories and items of optional equipment which are not part of the standard specification or are not available for all of the models listed. The data sheet may contain product types and support services not available in certain countries.

FUSO – A Daimler Truck Group Brand

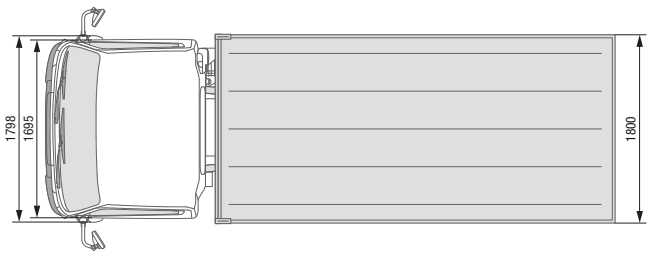

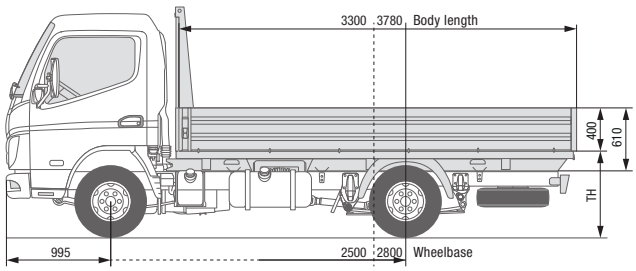

PLATFORM SCATTOLINI
CANTER 3S13
CANTER 3S13 DUONIC® 2.0

VEHICLE TYPE WITH WORKS BODY		3S13			3S13 DUONIC® 2.0		
Cab type / crew		Standard, single cab / 3					
Left-hand/right-hand drive		● / –	● / –	● / –	● / –	● / –	● / –
Model variant[1) 2)]		46900211	46900311	46900511	46901211	46901311	46901511
FUSO model code[2)]		FEA01BL4SEUW	FEA01CL4SEUW	FEA01EL4SEUW	FEA01BL3SEUW	FEA01CL3SEUW	FEA01EL3SEUW
Platform, aluminium	MB Code / MTFE Code	OS1 / 1F					
		SCATTOLINI platform with aluminium side walls, sandwich floor with water-resistant bonding, non-slip					
DIMENSIONS [MM]							
Wheelbase		2500	2800	3400	2500	2800	3400
Body	Length	3300	3780	4300	3300	3780	4300
	Width	1900	1900	1800	1900	1900	1800
	Floor thickness	15	15	15	15	15	15
Overall height incl. subframe		610	610	610	610	610	610
Dropside height		400	400	400	400	400	400
Loading height of platform floor (theoretical figure)[3)]		945	940	980	945	940	980
Height of front wall guard incl. subframe		1535			1535		
DIMENSIONS CHASSIS [MM]							
Vehicle overhang, rear		1425	1605	1550	1425	1605	1550
Vehicle overhang, front		995			995		
WEIGHTS [KG]							
Kerb weight incl. body	Total	2360*	2360*	2325	2355*	2355*	2325
	Front	1435	1459	1520	1447	1459	1520
	Rear	925	901	805	908	896	805
Body weight		420*	405*	335	385*	375*	335
Gross vehicle weight / gross combination weight		3500 / 7000			3500 / 7000		
Towed weight	Braked / unbraked	3500 / 750			3500 / 750		
Axle loads, chassis	Front	1950			1950		
	Rear	2500			2500		
Payload	Total	1140	1140	1175	1145	1145	1175
Axle load reserves, chassis	Total	950			950		

● available
– not available

1) Corresponds to MB model code
2) Information for left-hand-drive version only
3) Theoretical figure

* including auxiliary weight up to 2355 kg (Reference Mass Regulation)

Subject to change without notice. All data is approximate. The illustrations may contain accessories and items of optional equipment which are not part of the standard specification or are not available for all of the models listed.
The data sheet may contain product types and support services not available in certain countries.

PLATFORM SCATTOLINI
CANTER 3S13
CANTER 3S13 DUONIC® 2.0

VEHICLE TYPE WITH WORKS BODY		3S13			3S13 DUONIC® 2.0		
Cab type / crew		Standard, single cab / 3					
Left-hand/right-hand drive		● / –	● / –	● / –	● / –	● / –	● / –
Model variant[1) 2)]		46900211	46900311	46900511	46901211	46901311	46901511
FUSO model code[2)]		FEA01BL4SEUW	FEA01CL4SEUW	FEA01EL4SEUW	FEA01BL3SEUW	FEA01CL3SEUW	FEA01EL3SEUW
Platform, aluminium	MB Code / MTFE Code	OS1 / 1F					
		SCATTOLINI platform with aluminium side walls, sandwich floor with water-resistant bonding, non-slip					
OPTIONS							
Material carrier at rear		PZ9 / 1R					
		Material carrier at rear of the platform body for transporting long materials and ladders, weight 20 kg					
Side underride guard		WY3 / 1S					
		Underride guard fitted to the frame at the sides between the axles, aluminium section with plastic end caps, weight 11-12 kg					
Toolbox		WP5 / 1L					
		Plastic toolbox, protected from spray water, measuring 440 × 330 × 280 mm (B × H × D), weight 6 kg					
OPTIONS (COMPULSORY)							
Body support brackets		CR8 / FK					
		Support brackets on frame to make it easier to mount bodies, shackles riveted to the chassis frame, weight approx. 6-12 kg (depending on model)					

● available
– not available

1) Corresponds to MB model code
2) Information for left-hand-drive version only

Subject to change without notice. All data is approximate. The illustrations may contain accessories and items of optional equipment which are not part of the standard specification or are not available for all of the models listed.
The data sheet may contain product types and support services not available in certain countries.

FUSO – A Daimler Truck Group Brand

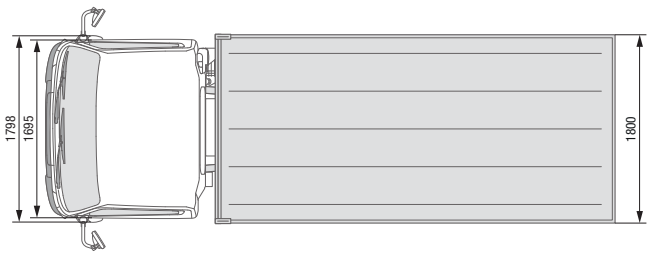

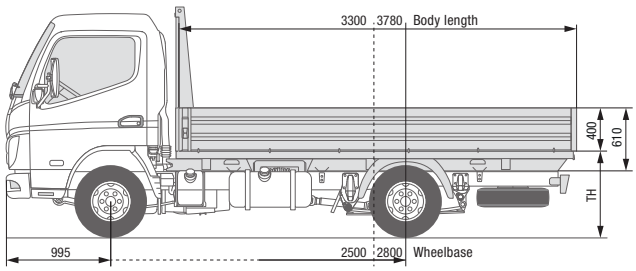

PLATFORM SCATTOLINI
CANTER 3S15
CANTER 3S15 DUONIC® 2.0

VEHICLE TYPE WITH WORKS BODY		3S15		3S15 DUONIC® 2.0	
Cab type / crew		Standard, single cab / 3			
Left-hand/right-hand drive		● / –	● / –	● / –	● / –
Model variant[1) 2)]		46902211	46902311	46903211	46903311
FUSO model code[2)]		FEA01BL4SEUX	FEA01CL4SEUX	FEA01BL3SEUX	FEA01CL3SEUX
Platform, aluminium	MB Code / MTFE Code	OS1 / 1F			
		SCATTOLINI platform with aluminium side walls, sandwich floor with water-resistant bonding, non-slip			
DIMENSIONS [MM]					
Wheelbase		2500	2800	2500	2800
Body	Length	3300	3780	3300	3780
	Width	1900	1900	1900	1900
	Floor thickness	15	15	15	15
Overall height incl. subframe		610	610	610	610
Dropside height		400	400	400	400
Loading height of platform floor (theoretical figure)[3)]		945	940	945	940
Height of front wall guard incl. subframe		1535		1535	
DIMENSIONS CHASSIS [MM]					
Vehicle overhang, rear		1425	1605	1425	1605
Vehicle overhang, front		995	995	995	995
WEIGHTS [KG]					
Kerb weight incl. body	Total	2355*	2355*	2355*	2355*
	Front	1402	1426	1411	1435
	Rear	953	929	944	920
Body weight*		435	425	415	405
Gross vehicle weight / gross combination weight		3500 / 7000		3500 / 7000	
Towed weight	Braked / unbraked	3500 / 750		3500 / 750	
Axle loads, chassis	Front	1950		1950	
	Rear	2500		2500	
Payload	Total	1145	1145	1145	1145
Axle load reserves, chassis	Total	950		950	

● available
– not available

1) Corresponds to MB model code
2) Information for left-hand-drive version only
3) Theoretical figure

* including auxiliary weight up to 2355 kg (Reference Mass Regulation)

Subject to change without notice. All data is approximate. The illustrations may contain accessories and items of optional equipment which are not part of the standard specification or are not available for all of the models listed. The data sheet may contain product types and support services not available in certain countries.

PLATFORM SCATTOLINI
CANTER 3S15
CANTER 3S15 DUONIC® 2.0

VEHICLE TYPE WITH WORKS BODY		3S15		3S15 DUONIC® 2.0	
Cab type / crew		Standard, single cab / 3			
Left-hand/right-hand drive		● / –	● / –	● / –	● / –
Model variant[1) 2)]		46902211	46902311	46903211	46903311
FUSO model code[2)]		FEA01BL4SEUX	FEA01CL4SEUX	FEA01BL3SEUX	FEA01CL3SEUX
Platform, aluminium	MB Code / MTFE Code	OS1 / 1F			
		SCATTOLINI platform with aluminium side walls, sandwich floor with water-resistant bonding, non-slip			
OPTIONS					
Material carrier at rear		PZ9 / 1R			
		Material carrier at rear of the platform body for transporting long materials and ladders, weight 20 kg			
Side underride guard		WY3 / 1S			
		Underride guard fitted to the frame at the sides between the axles, aluminium section with plastic end caps, weight 11-12 kg			
Toolbox		WP5 / 1L			
		Plastic toolbox, protected from spray water, measuring 440 × 330 × 280 mm (B × H × D), weight 6 kg			
OPTIONS (COMPULSORY)					
Body support brackets		CR8 / FK			
		Support brackets on frame to make it easier to mount bodies, shackles riveted to the chassis frame, weight approx. 6-12 kg (depending on model)			

● available
– not available

1) Corresponds to MB model code
2) Information for left-hand-drive version only

Subject to change without notice. All data is approximate. The illustrations may contain accessories and items of optional equipment which are not part of the standard specification or are not available for all of the models listed. The data sheet may contain product types and support services not available in certain countries.

FUSO – A Daimler Truck Group Brand

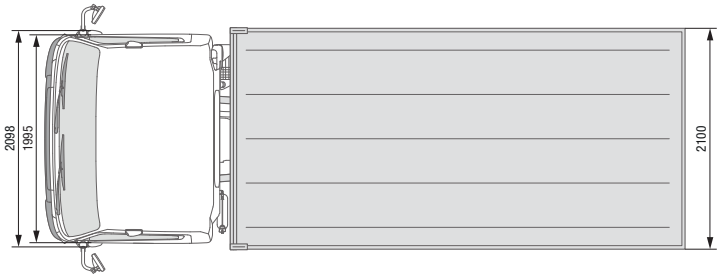

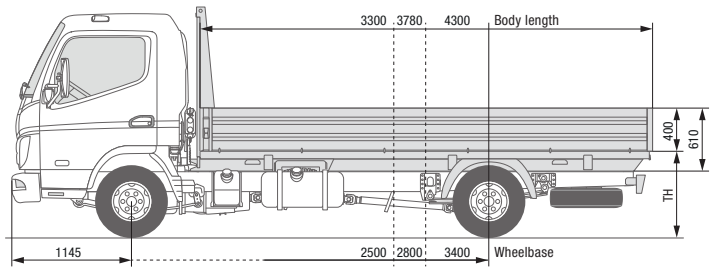

PLATFORM SCATTOLINI
CANTER 3C13
CANTER 3C13 DUONIC® 2.0

VEHICLE TYPE WITH WORKS BODY		3C13			3C13 DUONIC® 2.0		
Cab type / crew		Comfort, single cab / 3					
Left-hand/right-hand drive		● / ●	● / ●	● / ●	● / ●	● / ●	● / ●
Model variant[1) 2)]		46904211	46904311	46904511	46905211	46905311	46905511
FUSO model code[2)]		FEB01BL4SEUW	FEB01CL4SEUW	FEB01EL4SEUW	FEB01BL3SEUW	FEB01CL3SEUW	FEB01EL3SEUW
Platform, aluminium	MB Code / MTFE Code	OS1 / 1F					
		SCATTOLINI platform with aluminium side walls, sandwich floor with water-resistant bonding, non-slip					
DIMENSIONS [MM]							
Wheelbase		2500	2800	3400	2500	2800	3400
Body	Length	3300	3780	4300	3300	3780	4300
	Width	2100	2100	2100	2100	2100	2100
	Floor thickness	15	15	15	15	15	15
Overall height incl. subframe		610	610	610	610	610	610
Dropside height		400	400	400	400	400	400
Loading height of platform floor (theoretical figure)[3)]		965	960	960	965	960	960
Height of front wall guard incl. subframe		1535			1535		
DIMENSIONS CHASSIS [MM]							
Vehicle overhang, rear		1425	1605	1525	1425	1605	1525
Vehicle overhang, front		1145	1145	1145	1145	1145	1145
WEIGHTS [KG]							
Kerb weight incl. body	Total	2355*	2393	2458	2363	2413	2483
	Front	1488	1544	1594	1520	1574	1818
	Rear	867	849	864	843	839	865
Body weight		315*	343	388	303	343	388
Gross vehicle weight / gross combination weight		3500 / 7000			3500 / 7000		
Towed weight	Braked / unbraked	3500 / 750			3500 / 750		
Axle loads, chassis	Front	1950			1950		
	Rear	2500			2500		
Payload	Total	1145	1107	1042	1137	1087	1017
Axle load reserves, chassis	Total	950			950		

● available
– not available

1) Corresponds to MB model code
2) Information for left-hand-drive version only
3) Theoretical figure

* including auxiliary weight up to 2355 kg (Reference Mass Regulation)

Subject to change without notice. All data is approximate. The illustrations may contain accessories and items of optional equipment which are not part of the standard specification or are not available for all of the models listed. The data sheet may contain product types and support services not available in certain countries.

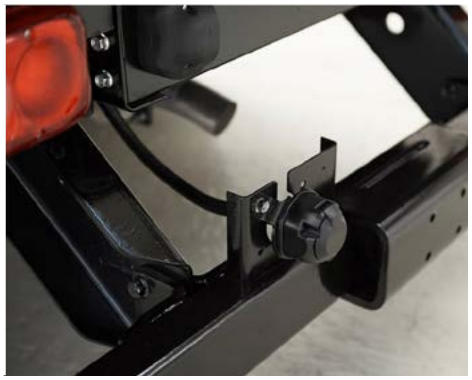

PLATFORM SCATTOLINI
CANTER 3C13
CANTER 3C13 DUONIC® 2.0

VEHICLE TYPE WITH WORKS BODY		3C13			3C13 DUONIC® 2.0		
Cab type / crew		Comfort, single cab / 3					
Left-hand/right-hand drive		● / ●	● / ●	● / ●	● / ●	● / ●	● / ●
Model variant[1) 2)]		46904211	46904311	46904511	46905211	46905311	46905511
FUSO model code[2)]		FEB01BL4SEUW	FEB01CL4SEUW	FEB01EL4SEUW	FEB01BL3SEUW	FEB01CL3SEUW	FEB01EL3SEUW
Platform, aluminium	MB Code / MTFE Code	OS1 / 1F					
		SCATTOLINI platform with aluminium side walls, sandwich floor with water-resistant bonding, non-slip					
OPTIONS							
Material carrier at rear		PZ9 / 1R					
		Material carrier at rear of the platform body for transporting long materials and ladders, weight 21 kg					
Side underride guard		WY3 / 1S					
		Underride guard fitted to the frame at the sides between the axles, aluminium section with plastic end caps, weight 11-16 kg					
Toolbox		WP5 / 1L					
		Plastic toolbox, protected from spray water, measuring 440 × 330 × 280 mm (B × H × D), weight 6 kg					
OPTIONS (COMPULSORY)							
Body support brackets		CR8 / FK					
		Support brackets on frame to make it easier to mount bodies, shackles riveted to the chassis frame, weight approx. 6-12 kg (depending on model)					

● available
– not available

1) Corresponds to MB model code
2) Information for left-hand-drive version only

Subject to change without notice. All data is approximate. The illustrations may contain accessories and items of optional equipment which are not part of the standard specification or are not available for all of the models listed. The data sheet may contain product types and support services not available in certain countries.

FUSO – A Daimler Truck Group Brand

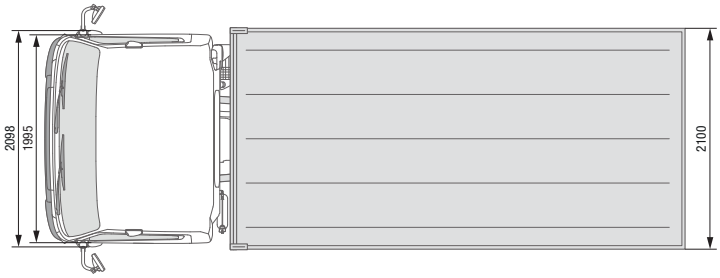

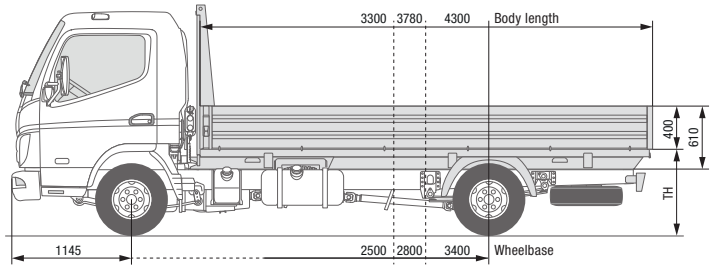

PLATFORM SCATTOLINI
CANTER 3C15
CANTER 3C15 DUONIC® 2.0

VEHICLE TYPE WITH WORKS BODY		3C15			3C15 DUONIC® 2.0		
Cab type / crew		Comfort, single cab / 3					
Left-hand/right-hand drive		● / –	● / –	● / –	● / ●	● / ●	● / ●
Model variant[1) 2)]		46906211	46906311	46906511	46907211	46907311	46907511
FUSO model code[2)]		FEB01BL4SEUX	FEB01CL4SEUX	FEB01EL4SEUX	FEB01BL3SEUX	FEB01CL3SEUX	FEB01EL3SEUX
Platform, aluminium	MB Code / MTFE Code	OS1 / 1F SCATTOLINI platform with aluminium side walls, sandwich floor with water-resistant bonding, non-slip					
DIMENSIONS [MM]							
Wheelbase		2500	2800	3400	2500	2800	3400
Body	Length	3300	3780	4300	3300	3780	4300
	Width	2100	2100	2100	2100	2100	2100
	Floor thickness	15	15	15	15	15	15
Overall height incl. subframe		610	610	610	610	610	610
Dropside height		400	400	400	400	400	400
Loading height of platform floor (theoretical figure)[3)]		965	960	980	965	960	960
Height of front wall guard incl. subframe		1535			1535		
DIMENSIONS CHASSIS [MM]							
Vehicle overhang, rear		1425	1605	1525	1425	1605	1525
Vehicle overhang, front		1145	1145	1145	1145	1145	1145
WEIGHTS [KG]							
Kerb weight incl. body	Total	2355*	2393	2458	2363	2413	2483
	Front	1496	1582	1599	1514	1572	1618
	Rear	859	811	859	849	841	865
Body weight		315*	343	388	303	343	388
Gross vehicle weight / gross combination weight		3500 / 7000			3500 / 7000		
Towed weight	Braked / unbraked	3500 / 750			3500 / 750		
Axle loads, chassis	Front	1950			1950		
	Rear	2500			2500		
Payload	Total	1145	1107	1042	1137	1087	1017
Axle load reserves, chassis	Total	950			950		

● available
– not available

1) Corresponds to MB model code
2) Information for left-hand-drive version only
3) Theoretical figure

* including auxiliary weight up to 2355 kg (Reference Mass Regulation)

Subject to change without notice. All data is approximate. The illustrations may contain accessories and items of optional equipment which are not part of the standard specification or are not available for all of the models listed. The data sheet may contain product types and support services not available in certain countries.

PLATFORM SCATTOLINI
CANTER 3C15
CANTER 3C15 DUONIC® 2.0

VEHICLE TYPE WITH WORKS BODY		3C15			3C15 DUONIC® 2.0		
Cab type / crew		Comfort, single cab / 3					
Left-hand/right-hand drive		● / –	● / –	● / –	● / ●	● / ●	● / ●
Model variant[1) 2)]		46906211	46906311	46906511	46907211	46907311	46907511
FUSO model code[2)]		FEB01BL4SEUX	FEB01CL4SEUX	FEB01EL4SEUX	FEB01BL3SEUX	FEB01CL3SEUX	FEB01EL3SEUX
Platform, aluminium	MB Code / MTFE Code	OS1 / 1F					
		SCATTOLINI platform with aluminium side walls, sandwich floor with water-resistant bonding, non-slip					
OPTIONS							
Material carrier at rear		PZ9 / 1R					
		Material carrier at rear of the platform body for transporting long materials and ladders, weight 21 kg					
Side underride guard		WY3 / 1S					
		Underride guard fitted to the frame at the sides between the axles, aluminium section with plastic end caps, weight 11-16 kg					
Toolbox		WP5 / 1L					
		Plastic toolbox, protected from spray water, measuring 440 × 330 × 280 mm (B × H × D), weight 6 kg					
OPTIONS (COMPULSORY)							
Body support brackets		CR8 / FK					
		Support brackets on frame to make it easier to mount bodies, shackles riveted to the chassis frame, weight approx. 6-12 kg (depending on model)					

● available
– not available

1) Corresponds to MB model code
2) Information for left-hand-drive version only

Subject to change without notice. All data is approximate. The illustrations may contain accessories and items of optional equipment which are not part of the standard specification or are not available for all of the models listed. The data sheet may contain product types and support services not available in certain countries.

FUSO – A Daimler Truck Group Brand

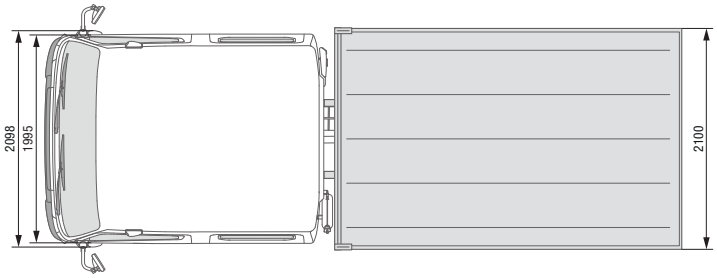

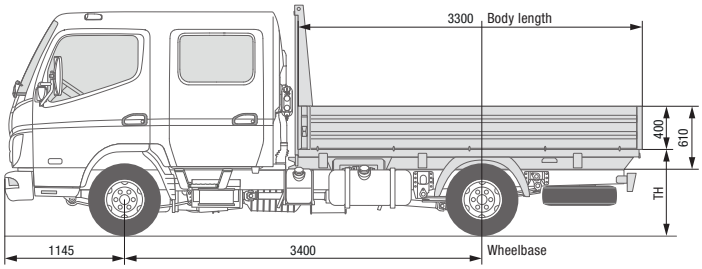

PLATFORM SCATTOLINI
CANTER 3C15D
CANTER 3C15D DUONIC® 2.0

VEHICLE TYPE WITH WORKS BODY		3C15D	3C15D DUONIC® 2.0
Cab type / crew		Comfort, crew cab / 6	
Left-hand/right-hand drive		● / ●	● / ●
Model variant[1) 2)]		46906513	46907513
FUSO model code[2)]		FEB01EL4WEUX	FEB01EL3WEUX
Platform, aluminium	MB Code / MTFE Code	OS1 / 1F SCATTOLINI platform with aluminium side walls, sandwich floor with water-resistant bonding, non-slip	
DIMENSIONS [MM]			
Wheelbase		3400	3400
Body	Length	3300	3300
	Width	2100	2100
	Floor thickness	15	15
Overall height incl. subframe		610	610
Dropside height		400	400
Loading height of platform floor (theoretical figure)[3)]		975	960
Height of front wall guard incl. subframe		1535	1535
DIMENSIONS CHASSIS [MM]			
Vehicle overhang, rear		1525	1525
Vehicle overhang, front		1145	1145
WEIGHTS [KG]			
Kerb weight incl. body	Total	2598	2618
	Front	1679	1701
	Rear	919	917
Body weight		303	303
Gross vehicle weight / gross combination weight		3500 / 7000	3500 / 7000
Towed weight	Braked / unbraked	3500 / 750	3500 / 750
Axle loads, chassis	Front	1950	1950
	Rear	2500	2500
Payload	Total	902	882
Axle load reserves, chassis	Total	950	950

● available
– not available

1) Corresponds to MB model code
2) Information for left-hand-drive version only
3) Theoretical figure

Subject to change without notice. All data is approximate. The illustrations may contain accessories and items of optional equipment which are not part of the standard specification or are not available for all of the models listed. The data sheet may contain product types and support services not available in certain countries.

PLATFORM SCATTOLINI
CANTER 3C15D
CANTER 3C15D DUONIC® 2.0

VEHICLE TYPE WITH WORKS BODY		3C15D	3C15D DUONIC® 2.0
Cab type / crew		Comfort, crew cab / 6	
Left-hand/right-hand drive		● / ●	● / ●
Model variant[1) 2)]		46906513	46907513
FUSO model code[2)]		FEB01EL4WEUX	FEB01EL3WEUX
Platform, aluminium	MB Code / MTFE Code	OS1 / 1F	
		SCATTOLINI platform with aluminium side walls, sandwich floor with water-resistant bonding, non-slip	
OPTIONS			
Material carrier at rear		PZ9 / 1R	
		Material carrier at rear of the platform body for transporting long materials and ladders, weight 21 kg	
Side underride guard		WY3 / 1S	
		Underride guard fitted to the frame at the sides between the axles, aluminium section with plastic end caps, weight 16 kg	
Toolbox		WP5 / 1L	
		Plastic toolbox, protected from spray water, measuring 440 × 330 × 280 mm (B × H × D), weight 6 kg	
OPTIONS (COMPULSORY)			
Body support brackets		CR8 / FK	
		Support brackets on frame to make it easier to mount bodies, shackles riveted to the chassis frame, weight approx. 6-12 kg (depending on model)	

● available
– not available

1) Corresponds to MB model code
2) Information for left-hand-drive version only

Subject to change without notice. All data is approximate. The illustrations may contain accessories and items of optional equipment which are not part of the standard specification or are not available for all of the models listed. The data sheet may contain product types and support services not available in certain countries.

FUSO – A Daimler Truck Group Brand

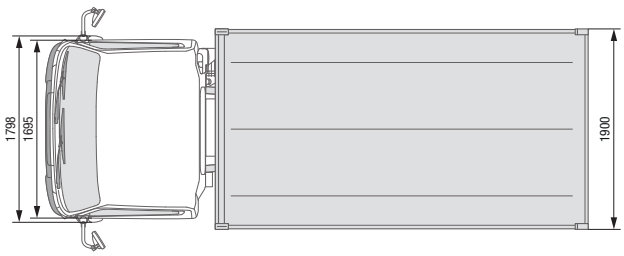

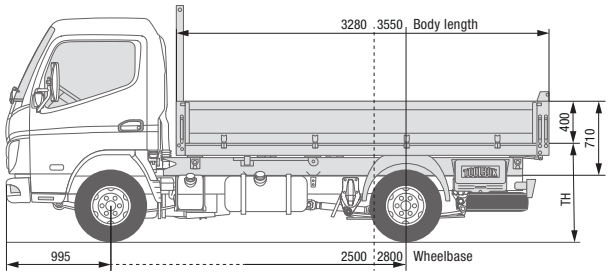

THREE-WAY TIPPER SCATTOLINI
CANTER 3S13
CANTER 3S13 DUONIC® 2.0

VEHICLE TYPE WITH WORKS BODY		3S13		3S13 DUONIC® 2.0	
Cab type / crew		Standard, single cab / 3			
Left-hand/right-hand drive		● / –	● / –	● / –	● / –
Model variant[1) 2)]		46900211	46900311	46901211	46901311
FUSO model code[2)]		FEA01BL4SEUW	FEA01CL4SEUW	FEA01BL3SEUW	FEA01CL3SEUW
Three-way tipper, aluminium	MB Code / MTFE Code	OS2 / 1G			
		SCATTOLINI three-way tipper with aluminium side walls, robust, puncture-proof steel floor, tipping angle 45°			
Three-way tipper, steel	MB Code / MTFE Code	OS3 / 1H			
		SCATTOLINI three-way tipper with steel side walls, robust, puncture-proof steel floor, tipping angle 45°			
DIMENSIONS [MM]					
Wheelbase		2500	2800	2500	2800
Body	Length	3280	3550	3280	3550
	Width	1900	1900	1900	1900
	Floor thickness	2.5	2.5	2.5	2.5
Overall height incl. subframe		710	710	710	710
Dropside height		400	400	400	400
Loading height of tipper floor (theoretical figure)[3)]		1045	1040	1045	1040
Height of front wall guard incl. subframe		1535		1535	
DIMENSIONS CHASSIS (MM)					
Vehicle overhang, rear		1405	1375	1405	1375
Vehicle overhang, front		995	995	995	995
WEIGHTS [KG]					
Kerb weight incl. body[4)]	Total	2573 (2613)	2608	2593 (2633)	2628
	Front	1473 (1477)	1526	1495 (1498)	1549
	Rear	1100 (1136)	1082	1093 (1130)	1079
Body weight[4)]		633 (673)	658	633 (673)	658
Gross vehicle weight / gross combination weight		3500 / 7000		3500 / 7000	
Towed weight	Braked / unbraked	3500 / 750		3500 / 750	
Axle loads, chassis	Front	1950		1950	
	Rear	2500		2500	
Payload[4)]	Total	927 (887)	892	907 (867)	872
Axle load reserves, chassis	Total	950		950	

● available
– not available

1) Corresponds to MB model code
2) Information for left-hand-drive version only
3) Theoretical figure
4) Side walls in aluminium (steel)

Subject to change without notice. All data is approximate. The illustrations may contain accessories and items of optional equipment which are not part of the standard specification or are not available for all of the models listed. The data sheet may contain product types and support services not available in certain countries.

THREE-WAY TIPPER SCATTOLINI
CANTER 3S13
CANTER 3S13 DUONIC® 2.0

VEHICLE TYPE WITH WORKS BODY		3S13		3S13 DUONIC® 2.0	
Cab type / crew		Standard, single cab / 3			
Left-hand/right-hand drive		● / –	● / –	● / –	● / –
Model variant[1) 2)]		46900211	46900311	46901211	46901311
FUSO model code[2)]		FEA01BL4SEUW	FEA01CL4SEUW	FEA01BL3SEUW	FEA01CL3SEUW
Three-way tipper, aluminium	MB Code / MTFE Code	OS2 / 1G			
		SCATTOLINI three-way tipper with aluminium side walls, robust, puncture-proof steel floor, tipping angle 45°			
Three-way tipper, steel	MB Code / MTFE Code	OS3 / 1H			
		SCATTOLINI three-way tipper with steel side walls, robust, puncture-proof steel floor, tipping angle 45°			

OPTIONS	
Material carrier at rear	PZ9 / 1R
	Material carrier at rear of the platform body for transporting long materials and ladders, weight 17 kg
Side underride guard	WY3 / 1S
	Underride guard fitted to the frame at the sides between the axles, aluminium section with plastic end caps, weight 18-20 kg
Toolbox	WP5 / 1L
	Plastic toolbox, protected from spray water, measuring 440 × 330 × 280 mm (B × H × D), weight 7 kg
SCATTOLINI deflector tailgate	OU2 / 1V
	Deflector mounted on rear dropside, protects against jamming with trailer coupling, weight 1 kg
Edge protection for aluminium works bodies	OU4 / 1U
	PVC protection for aluminium dropsides, weight 3 kg
Edge protection for steel works bodies	OU5 / 1Z
	PVC protection for steel dropsides, weight 3 kg
Automatic unlocking of the tailgate	OU6 / 1Y
	The rear dropside opens automatically during the tipping procedure, weight 6 kg

OPTIONS (COMPULSORY)	
Body support brackets	CR8 / FK
	Support brackets on frame to make it easier to mount bodies, weight approx. 6-12 kg (depending on model)
Batteries, 2 × 12 V / 100 Ah, maintenance-free	EE9 / EL
	Second battery for higher availability of the electro hydraulic tipper, weight 30 kg

● available
– not available

1) Corresponds to MB model code
2) Information for left-hand-drive version only

Subject to change without notice. All data is approximate. The illustrations may contain accessories and items of optional equipment which are not part of the standard specification or are not available for all of the models listed. The data sheet may contain product types and support services not available in certain countries.

FUSO – A Daimler Truck Group Brand

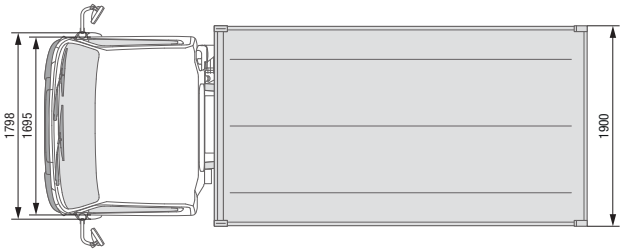

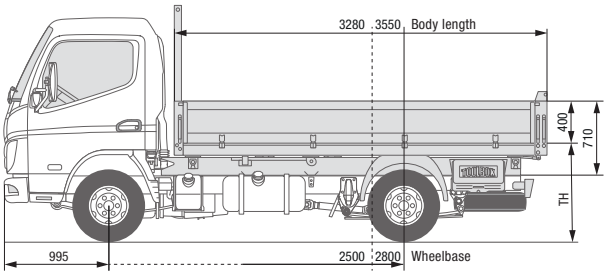

THREE-WAY TIPPER SCATTOLINI
CANTER 3S15
CANTER 3S15 DUONIC® 2.0

VEHICLE TYPE WITH WORKS BODY		3S15		3S15 DUONIC® 2.0	
Cab type / crew		Standard, single cab / 3			
Left-hand/right-hand drive		● / –	● / –	● / –	● / –
Model variant[1) 2)]		46902211	46902311	46903211	46903311
FUSO model code[2)]		FEA01BL4SEUX	FEA01CL4SEUX	FEA01BL3SEUX	FEA01CL3SEUX
Three-way tipper, aluminium	MB Code / MTFE Code	OS2 / 1G			
		SCATTOLINI three-way tipper with aluminium side walls, robust, puncture-proof steel floor, tipping angle 45°			
Three-way tipper, steel	MB Code / MTFE Code	OS3 / 1H			
		SCATTOLINI three-way tipper with steel side walls, robust, puncture-proof steel floor, tipping angle 45°			
DIMENSIONS [MM]					
Wheelbase		2500	2800	2500	2800
Body	Length	3280	3550	3280	3550
	Width	1900	1900	1900	1900
	Floor thickness	2.5	2.5	2.5	2.5
Overall height incl. subframe		710	710	710	710
Dropside height		400	400	400	400
Loading height of tipper floor (theoretical figure)[3)]		1045	1040	1045	1040
Height of front wall guard incl. subframe		1535		1535	
DIMENSIONS CHASSIS [MM]					
Vehicle overhang, rear		1405	1375	1405	1375
Vehicle overhang, front		995	995	995	995
WEIGHTS [KG]					
Kerb weight incl. body[4)]	Total	2573 (2613)	2608	2593 (2633)	2628
	Front	1476 (1479)	1526	1500 (1503)	1549
	Rear	1100 (1136)	1082	1093 (1130)	1079
Body weight[4)]		633 (673)	658	633 (673)	658
Gross vehicle weight / gross combination weight		3500 / 7000		3500 / 7000	
Towed weight	Braked / unbraked	3500 / 750		3500 / 750	
Axle loads, chassis	Front	1950		1950	
	Rear	2500		2500	
Payload[4)]	Total	927 (877)	892	907 (867)	872
Axle load reserves, chassis	Total	950		950	

● available
– not available

1) Corresponds to MB model code
2) Information for left-hand-drive version only
3) Theoretical figure
4) Side walls in aluminium (steel)

Subject to change without notice. All data is approximate. The illustrations may contain accessories and items of optional equipment which are not part of the standard specification or are not available for all of the models listed. The data sheet may contain product types and support services not available in certain countries.

THREE-WAY TIPPER SCATTOLINI
CANTER 3S15
CANTER 3S15 DUONIC® 2.0

VEHICLE TYPE WITH WORKS BODY		3S15		3S15 DUONIC® 2.0	
Cab type / crew		Standard, single cab / 3			
Left-hand/right-hand drive		● / –	● / –	● / –	● / –
Model variant[1) 2)]		46902211	46902311	46903211	46903311
FUSO model code[2)]		FEA01BL4SEUX	FEA01CL4SEUX	FEA01BL3SEUX	FEA01CL3SEUX
Three-way tipper, aluminium	MB Code / MTFE Code	OS2 / 1G			
		SCATTOLINI three-way tipper with aluminium side walls, robust, puncture-proof steel floor, tipping angle 45°			
Three-way tipper, steel	MB Code / MTFE Code	OS3 / 1H			
		SCATTOLINI three-way tipper with steel side walls, robust, puncture-proof steel floor, tipping angle 45°			
OPTIONS					
Material carrier at rear		PZ9 / 1R			
		Material carrier at rear of the platform body for transporting long materials and ladders, weight 17 kg			
Side underride guard		WY3 / 1S			
		Underride guard fitted to the frame at the sides between the axles, aluminium section with plastic end caps, weight 18-20 kg			
Toolbox		WP5 / 1L			
		Plastic toolbox, protected from spray water, measuring 440 × 330 × 280 mm (B × H × D), weight 7 kg			
SCATTOLINI deflector tailgate		OU2 / 1V			
		Deflector mounted on rear dropside, protects against jamming with trailer coupling, weight 1 kg			
Edge protection for aluminium works bodies		OU4 / 1U			
		PVC protection for aluminium dropsides, weight 3 kg			
Edge protection for steel works bodies		OU5 / 1Z			
		PVC protection for steel dropsides, weight 3 kg			
Automatic unlocking of the tailgate		OU6 / 1Y			
		The rear dropside opens automatically during the tipping procedure, weight 6 kg			
OPTIONS (COMPULSORY)					
Body support brackets		CR8 / FK			
		Support brackets on frame to make it easier to mount bodies, weight approx. 6-12 kg (depending on model)			
Batteries, 2 × 12 V / 100 Ah, maintenance-free		EE9 / EL			
		Second battery for higher availability of the electro hydraulic tipper, weight 30 kg			

● available
– not available

1) Corresponds to MB model code
2) Information for left-hand-drive version only

Subject to change without notice. All data is approximate. The illustrations may contain accessories and items of optional equipment which are not part of the standard specification or are not available for all of the models listed. The data sheet may contain product types and support services not available in certain countries.

FUSO – A Daimler Truck Group Brand

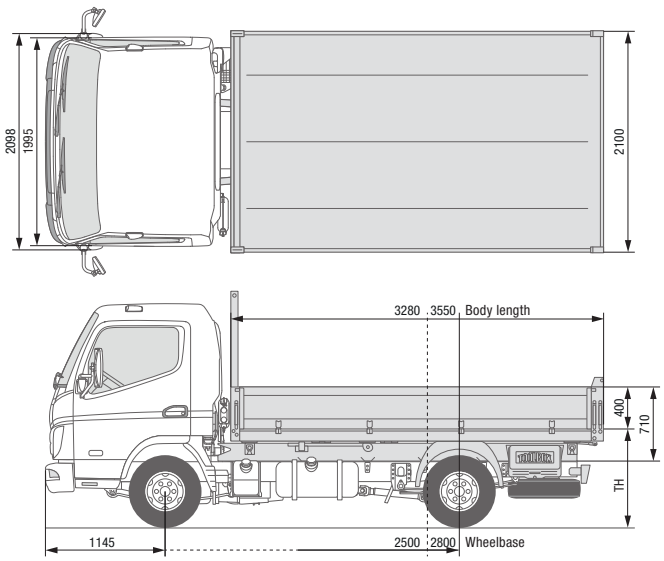

THREE-WAY TIPPER SCATTOLINI
CANTER 3C13
CANTER 3C13 DUONIC® 2.0

VEHICLE TYPE WITH WORKS BODY		3C13		3C13 DUONIC® 2.0	
Cab type / crew		Comfort, single cab / 3			
Left-hand/right-hand drive		● / ●	● / ●	● / ●	● / ●
Model variant[1) 2)]		46904211	46904311	46905211	46905311
FUSO model code[2)]		FEB01BL4SEUW	FEB01CL4SEUW	FEB01BL3SEUW	FEB01CL3SEUW
Three-way tipper, aluminium	MB Code / MTFE Code	OS2 / 1G			
		SCATTOLINI three-way tipper with aluminium side walls, robust, puncture-proof steel floor, tipping angle 45°			
Three-way tipper, steel	MB Code / MTFE Code	OS3 / 1H			
		SCATTOLINI three-way tipper with steel side walls, robust, puncture-proof steel floor, tipping angle 45°			
DIMENSIONS [MM]					
Wheelbase		2500	2800	2500	2800
Body	Length	3280	3550	3280	3550
	Width	2100	2100	2100	2100
	Floor thickness	2.5	2.5	2.5	2.5
Overall height incl. subframe		710	710	710	710
Dropside height		400	400	400	400
Loading height of tipper floor (theoretical figure)[3)]		1065	1060	1065	1060
Height of front wall guard incl. subframe		1535		1535	
DIMENSIONS CHASSIS [MM]					
Vehicle overhang, rear		1365	1335	1365	1335
Vehicle overhang, front		1145	1145	1145	1145
WEIGHTS [KG]					
Kerb weight incl. body[4)]	Total	2698 (2738)	2733	2718 (2758)	2753
	Front	1568 (1573)	1629	1610 (1602)	1658
	Rear	1130 (1165)	1104	1108 (1156)	1095
Body weight[4)]		658 (698)	683	658 (698)	683
Gross vehicle weight / gross combination weight		3500 / 7000		3500 / 7000	
Towed weight	Braked / unbraked	3500 / 750		3500 / 750	
Axle loads, chassis	Front	1950		1950	
	Rear	2500		2500	
Payload[4)]	Total	802 (762)	767	782 (742)	747
Axle load reserves, chassis	Total	950		950	

● available
– not available

1) Corresponds to MB model code
2) Information for left-hand-drive version only
3) Theoretical figure
4) Side walls in aluminium (steel)

Subject to change without notice. All data is approximate. The illustrations may contain accessories and items of optional equipment which are not part of the standard specification or are not available for all of the models listed. The data sheet may contain product types and support services not available in certain countries.

THREE-WAY TIPPER SCATTOLINI
CANTER 3C13
CANTER 3C13 DUONIC® 2.0

VEHICLE TYPE WITH WORKS BODY		3C13		3C13 DUONIC® 2.0	
Cab type / crew		Comfort, single cab / 3			
Left-hand/right-hand drive		● / ●	● / ●	● / ●	● / ●
Model variant[1) 2)]		46904211	46904311	46905211	46905311
FUSO model code[2)]		FEB01BL4SEUW	FEB01CL4SEUW	FEB01BL3SEUW	FEB01CL3SEUW
Three-way tipper, aluminium	MB Code / MTFE Code	OS2 / 1G			
		SCATTOLINI three-way tipper with aluminium side walls, robust, puncture-proof steel floor, tipping angle 45°			
Three-way tipper, steel	MB Code / MTFE Code	OS3 / 1H			
		SCATTOLINI three-way tipper with steel side walls, robust, puncture-proof steel floor, tipping angle 45°			
OPTIONS					
Material carrier at rear		PZ9 / 1R			
		Material carrier at rear of the platform body for transporting long materials and ladders, weight 17 kg			
Side underride guard		WY3 / 1S			
		Underride guard fitted to the frame at the sides between the axles, aluminium section with plastic end caps, weight 18-20 kg			
Toolbox		WP5 / 1L			
		Plastic toolbox, protected from spray water, measuring 440 × 330 × 280 mm (B × H × D), weight 7 kg			
SCATTOLINI deflector tailgate		OU2 / 1V			
		Deflector mounted on rear dropside, protects against jamming with trailer coupling, weight 1 kg			
Edge protection for aluminium works bodies		OU4 / 1U			
		PVC protection for aluminium dropsides, weight 3 kg			
Edge protection for steel works bodies		OU5 / 1Z			
		PVC protection for steel dropsides, weight 3 kg			
Automatic unlocking of the tailgate		OU6 / 1Y			
		The rear dropside opens automatically during the tipping procedure, weight 6 kg			
OPTIONS (COMPULSORY)					
Body support brackets		CR8 / FK			
		Support brackets on frame to make it easier to mount bodies, weight approx. 6-12 kg (depending on model)			
Batteries, 2 × 12 V / 100 Ah, maintenance-free		EE9 / EL			
		Second battery for higher availability of the electro hydraulic tipper, weight 30 kg			

● available
– not available

1) Corresponds to MB model code
2) Information for left-hand-drive version only

Subject to change without notice. All data is approximate. The illustrations may contain accessories and items of optional equipment which are not part of the standard specification or are not available for all of the models listed. The data sheet may contain product types and support services not available in certain countries.

FUSO – A Daimler Truck Group Brand

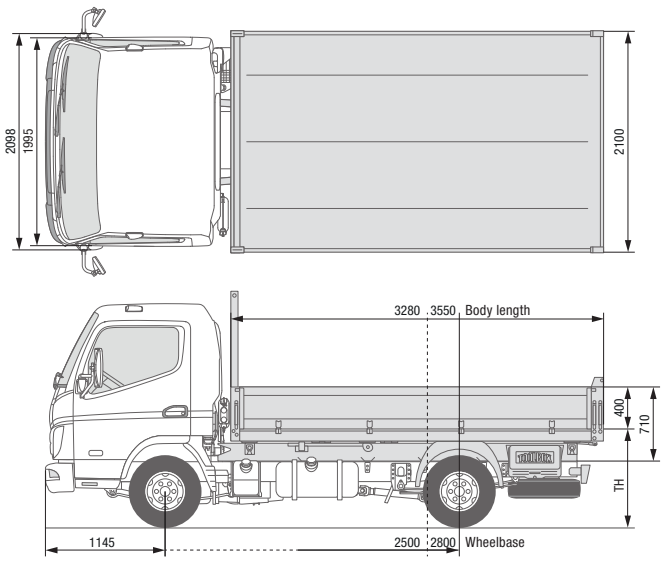

THREE-WAY TIPPER SCATTOLINI
CANTER 3C15
CANTER 3C15 DUONIC® 2.0

VEHICLE TYPE WITH WORKS BODY		3C15		3C15 DUONIC® 2.0	
Cab type / crew		Comfort, single cab / 3			
Left-hand/right-hand drive		● / –	● / –	● / ●	● / ●
Model variant[1) 2)]		46906211	46906311	46907211	46907311
FUSO model code[2)]		FEB01BL4SEUX	FEB01CL4SEUX	FEB01BL3SEUX	FEB01CL3SEUX
Three-way tipper, aluminium	MB Code / MTFE Code	OS2 / 1G			
		SCATTOLINI three-way tipper with aluminium side walls, robust, puncture-proof steel floor, tipping angle 45°			
Three-way tipper, steel	MB Code / MTFE Code	OS3 / 1H			
		SCATTOLINI three-way tipper with steel side walls, robust, puncture-proof steel floor, tipping angle 45°			
DIMENSIONS [MM]					
Wheelbase		2500	2800	2500	2800
Body	Length	3280	3550	3280	3550
	Width	2100	2100	2100	2100
	Floor thickness	2.5	2.5	2.5	2.5
Overall height incl. subframe		710	710	710	710
Dropside height		400	400	400	400
Loading height of tipper floor (theoretical figure)[3)]		1065	1060	1065	1060
Height of front wall guard incl. subframe		1535		1535	
DIMENSIONS CHASSIS [MM]					
Vehicle overhang, rear		1365	1335	1365	1335
Vehicle overhang, front		1145	1145	1145	1145
WEIGHTS [KG]					
Kerb weight incl. body[4)]	Total	2698 (2738)	2733	2718 (2758)	2753
	Front	1568 (1573)	1629	1610 (1602)	1658
	Rear	1130 (1165)	1104	1138 (1186)	1095
Body weight[4)]		658 (698)	683	658 (698)	683
Gross vehicle weight / gross combination weight		3500 / 7000		3500 / 7000	
Towed weight	Braked / unbraked	3500 / 750		3500 / 750	
Axle loads, chassis	Front	1950		1950	
	Rear	2500		2500	
Payload[4)]	Total	802 (762)	767	782 (742)	747
Axle load reserves, chassis	Total	950		950	

● available
– not available

1) Corresponds to MB model code
2) Information for left-hand-drive version only
3) Theoretical figure
4) Side walls in aluminium (steel)

Subject to change without notice. All data is approximate. The illustrations may contain accessories and items of optional equipment which are not part of the standard specification or are not available for all of the models listed. The data sheet may contain product types and support services not available in certain countries.

THREE-WAY TIPPER SCATTOLINI
CANTER 3C15
CANTER 3C15 DUONIC® 2.0

VEHICLE TYPE WITH WORKS BODY		3C15		3C15 DUONIC® 2.0	
Cab type / crew		Comfort, single cab / 3			
Left-hand/right-hand drive		● / –	● / –	● / ●	● / ●
Model variant[1) 2)]		46906211	46906311	46907211	46907311
FUSO model code[2)]		FEB01BL4SEUX	FEB01CL4SEUX	FEB01BL3SEUX	FEB01CL3SEUX
Three-way tipper, aluminium	MB Code / MTFE Code	OS2 / 1G			
		SCATTOLINI three-way tipper with aluminium side walls,robust, puncture-proof steel floor, tipping angle 45°			
Three-way tipper, steel	MB Code / MTFE Code	OS3 / 1H			
		SCATTOLINI three-way tipper with steel side walls, robust, puncture-proof steel floor, tipping angle 45°			
OPTIONS					
Material carrier at rear		PZ9 / 1R			
		Material carrier at rear of the platform body for transporting long materials and ladders, weight 17 kg			
Side underride guard		WY3 / 1S			
		Underride guard fitted to the frame at the sides between the axles, aluminium section with plastic end caps, weight 18-20 kg			
Toolbox		WP5 / 1L			
		Plastic toolbox, protected from spray water, measuring 440 × 330 × 280 mm (B × H × D), weight 7 kg			
SCATTOLINI deflector tailgate		OU2 / 1V			
		Deflector mounted on rear dropside, protects against jamming with trailer coupling, weight 1 kg			
Edge protection for aluminium works bodies		OU4 / 1U			
		PVC protection for aluminium dropsides, weight 3 kg			
Edge protection for steel works bodies		OU5 / 1Z			
		PVC protection for steel dropsides, weight 3 kg			
Automatic unlocking of the tailgate		OU6 / 1Y			
		The rear dropside opens automatically during the tipping procedure, weight 6 kg			
OPTIONS (COMPULSORY)					
Body support brackets		CR8 / FK			
		Support brackets on frame to make it easier to mount bodies, weight approx. 6-12 kg (depending on model)			
Batteries, 2 × 12 V / 100 Ah, maintenance-free		EE9 / EL			
		Second battery for higher availability of the electro hydraulic tipper, weight 30 kg			

● available
– not available

1) Corresponds to MB model code
2) Information for left-hand-drive version only

Subject to change without notice. All data is approximate. The illustrations may contain accessories and items of optional equipment which are not part of the standard specification or are not available for all of the models listed. The data sheet may contain product types and support services not available in certain countries.

FUSO – A Daimler Truck Group Brand

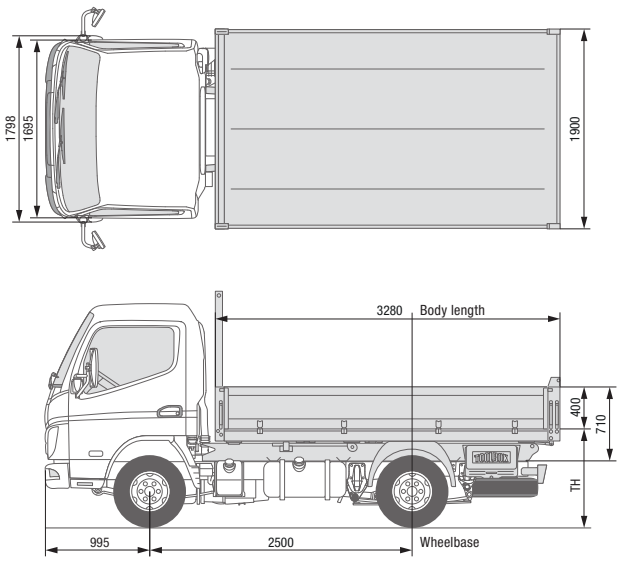

REAR TIPPER SCATTOLINI
CANTER 3S13
CANTER 3S13 DUONIC® 2.0

VEHICLE TYPE WITH WORKS BODY		3S13	3S13 DUONIC® 2.0
Cab type / crew		Standard, single cab / 3	
Left-hand/right-hand drive		● / –	● / –
Model variant[1) 2)]		46900211	46901211
FUSO model code[2)]		FEA01BL4SEUW	FEA01BL3SEUW
Rear tipper, steel	MB Code / MTFE Code	OS5 / 1K	
		SCATTOLINI rear tipper with steel side walls, robust, puncture-proof steel floor, tipping angle 45°	
DIMENSIONS [MM]			
Wheelbase		2500	2500
Body	Length	3280	3280
	Width	1900	1900
	Floor thickness	2.5	2.5
Overall height incl. subframe		710	710
Dropside height		400	400
Loading height of tipper floor (theoretical figure)[3)]		1045	1045
Height of front wall guard incl. subframe		1535	1535
DIMENSIONS CHASSIS [MM]			
Vehicle overhang, rear		1405	1405
Vehicle overhang, front		995	995
WEIGHTS [KG]			
Kerb weight incl. body[4)]	Total	2563	2583
	Front	1467	1499
	Rear	1186	1084
Body weight[4)]		623	623
Gross vehicle weight / gross combination weight		3500 / 7000	3500 / 7000
Towed weight	Braked / unbraked	3500 / 750	3500 / 750
Axle loads, chassis	Front	1950	1950
	Rear	2500	2500
Payload[4)]	Total	937	917
Axle load reserves, chassis	Total	950	950

● available
– not available

1) Corresponds to MB model code
2) Information for left-hand-drive version only
3) Theoretical figure
4) Side walls in steel

Subject to change without notice. All data is approximate. The illustrations may contain accessories and items of optional equipment which are not part of the standard specification or are not available for all of the models listed. The data sheet may contain product types and support services not available in certain countries.

FUSO – A Daimler Truck Group Brand

REAR TIPPER SCATTOLINI
CANTER 3S13
CANTER 3S13 DUONIC® 2.0

VEHICLE TYPE WITH WORKS BODY		3S13	3S13 DUONIC® 2.0
Cab type / crew		Standard, single cab / 3	
Left-hand/right-hand drive		● / –	● / –
Model variant[1) 2)]		46900211	46901211
FUSO model code[2)]		FEA01BL4SEUW	FEA01BL3SEUW
Rear tipper, aluminium	MB Code / MTFE Code	OS4 / 1J	
		SCATTOLINI rear tipper with aluminium side walls, robust, puncture-proof steel floor, tipping angle 45°	
Rear tipper, steel	MB Code / MTFE Code	OS5 / 1K	
		SCATTOLINI rear tipper with steel side walls, robust, puncture-proof steel floor, tipping angle 45°	
OPTIONS			
Material carrier at rear		PZ9 / 1R	
		Material carrier at rear of the platform body for transporting long materials and ladders, weight 17 kg	
Side underride guard		WY3 / 1S	
		Underride guard fitted to the frame at the sides between the axles, aluminium section with plastic end caps, weight 18-20 kg	
Toolbox		WP5 / 1L	
		Plastic toolbox, protected from spray water, measuring 440 × 330 × 280 mm (B × H × D), weight 7 kg	
SCATTOLINI deflector tailgate		OU2 / 1V	
		Deflector mounted on rear dropside, protects against jamming with trailer coupling, weight 1 kg	
Edge protection for steel works bodies		OU5 / 1Z	
		PVC protection for steel dropsides, weight 3 kg	
Automatic unlocking of the tailgate		OU6 / 1Y	
		The rear dropside opens automatically during the tipping procedure, weight 6 kg	
OPTIONS (COMPULSORY)			
Body support brackets		CR8 / FK	
		Support brackets on frame to make it easier to mount bodies, weight approx. 6-12 kg (depending on model)	
Batteries, 2 × 12 V / 100 Ah, maintenance-free		EE9 / EL	
		Second battery for higher availability of the electro hydraulic tipper, weight 30 kg	

● available
– not available

1) Corresponds to MB model code
2) Information for left-hand-drive version only

Subject to change without notice. All data is approximate. The illustrations may contain accessories and items of optional equipment which are not part of the standard specification or are not available for all of the models listed. The data sheet may contain product types and support services not available in certain countries.

FUSO – A Daimler Truck Group Brand

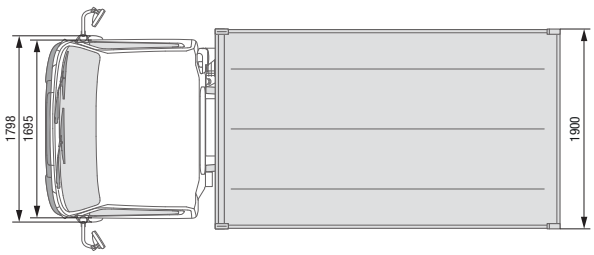

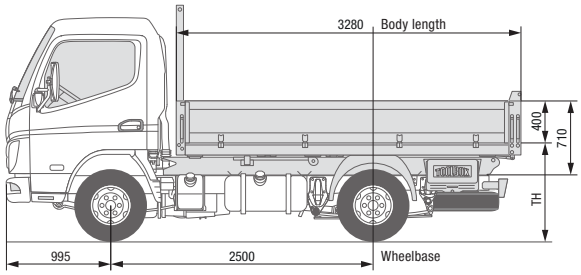

REAR TIPPER SCATTOLINI
CANTER 3S15
CANTER 3S15 DUONIC® 2.0

VEHICLE TYPE WITH WORKS BODY		3S15	3S15 DUONIC® 2.0
Cab type / crew		Standard, single cab / 3	
Left-hand/right-hand drive		● / –	● / –
Model variant[1) 2)]		46902211	46903211
FUSO model code[2)]		FEA01BL4SEUX	FEA01BL3SEUX
Rear tipper, steel	MB Code / MTFE Code	OS5 / 1K	
		SCATTOLINI rear tipper with steel side walls, robust, puncture-proof steel floor, tipping angle 45°	
DIMENSIONS [MM]			
Wheelbase		2500	2500
Body	Length	3280	3280
	Width	1900	1900
	Floor thickness	2.5	2.5
Overall height incl. subframe		710	710
Dropside height		400	400
Loading height of tipper floor (theoretical figure)[3)]		1045	1045
Height of front wall guard incl. subframe		1535	1535
DIMENSIONS CHASSIS [MM]			
Vehicle overhang, rear		1405	1405
Vehicle overhang, front		995	995
WEIGHTS [KG]			
Kerb weight incl. body[4)]	Total	2663	2583
	Front	1451	1470
	Rear	1112	1113
Body weight[4)]		623	623
Gross vehicle weight / gross combination weight		3500 / 7000	3500 / 7000
Towed weight	Braked / unbraked	3500 / 750	3500 / 750
Axle loads, chassis	Front	1950	1950
	Rear	2500	2500
Payload[4)]	Total	937	917
Axle load reserves, chassis	Total	950	950

● available
– not available

1) Corresponds to MB model code
2) Information for left-hand-drive version only
3) Theoretical figure
4) Side walls in steel

Subject to change without notice. All data is approximate. The illustrations may contain accessories and items of optional equipment which are not part of the standard specification or are not available for all of the models listed. The data sheet may contain product types and support services not available in certain countries.

FUSO – A Daimler Truck Group Brand

REAR TIPPER SCATTOLINI
CANTER 3S15
CANTER 3S15 DUONIC® 2.0

VEHICLE TYPE WITH WORKS BODY		3S15	3S15 DUONIC® 2.0
Cab type / crew		Standard, single cab / 3	
Left-hand/right-hand drive		● / –	● / –
Model variant[1) 2)]		46902211	46903211
FUSO model code[2)]		FEA01BL4SEUX	FEA01BL3SEUX
Rear tipper, aluminium	MB Code / MTFE Code	OS4 / 1J	
		SCATTOLINI rear tipper with aluminium side walls, robust, puncture-proof steel floor, tipping angle 45°	
Rear tipper, steel	MB Code / MTFE Code	OS5 / 1K	
		SCATTOLINI rear tipper with steel side walls, robust, puncture-proof steel floor, tipping angle 45°	
OPTIONS			
Material carrier at rear		PZ9 / 1R	
		Material carrier at rear of the platform body for transporting long materials and ladders, weight 17 kg	
Side underride guard		WY3 / 1S	
		Underride guard fitted to the frame at the sides between the axles, aluminium section with plastic end caps, weight 18-20 kg	
Toolbox		WP5 / 1L	
		Plastic toolbox, protected from spray water, measuring 440 × 330 × 280 mm (B × H × D), weight 7 kg	
SCATTOLINI deflector tailgate		OU2 / 1V	
		Deflector mounted on rear dropside, protects against jamming with trailer coupling, weight 1 kg	
Edge protection for steel works bodies		OU5 / 1Z	
		PVC protection for steel dropsides, weight 3 kg	
Automatic unlocking of the tailgate		OU6 / 1Y	
		The rear dropside opens automatically during the tipping procedure, weight 6 kg	
OPTIONS (COMPULSORY)			
Body support brackets		CR8 / FK	
		Support brackets on frame to make it easier to mount bodies, weight approx. 6-12 kg (depending on model)	
Batteries, 2 × 12 V / 100 Ah, maintenance-free		EE9 / EL	
		Second battery for higher availability of the electro hydraulic tipper, weight 30 kg	

● available
– not available

1) Corresponds to MB model code
2) Information for left-hand-drive version only

Subject to change without notice. All data is approximate. The illustrations may contain accessories and items of optional equipment which are not part of the standard specification or are not available for all of the models listed. The data sheet may contain product types and support services not available in certain countries.

FUSO – A Daimler Truck Group Brand

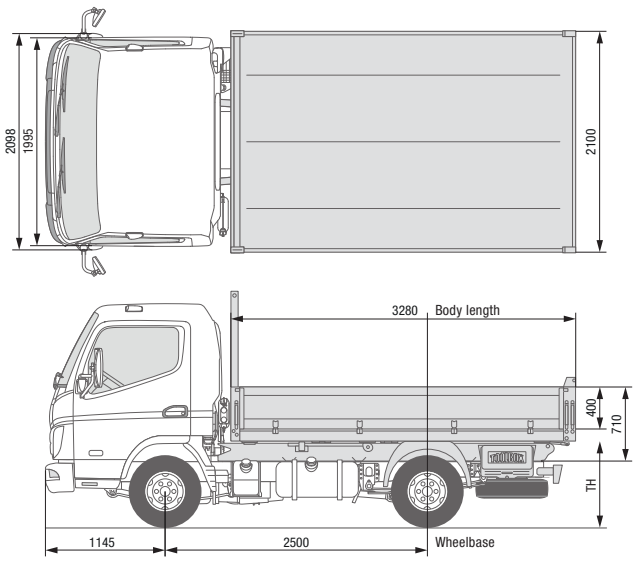

REAR TIPPER SCATTOLINI
CANTER 3C13
CANTER 3C13 DUONIC® 2.0

VEHICLE TYPE WITH WORKS BODY		3C13	3C13 DUONIC® 2.0
Cab type / crew		Comfort, single cab / 3	
Left-hand/right-hand drive		● / ●	● / ●
Model variant[1) 2)]		46904211	46905211
FUSO model code[2)]		FEB01BL4SEUW	FEB01BL3SEUW
Rear tipper, aluminium	MB Code / MTFE Code	OS4 / 1J	
		SCATTOLINI rear tipper with aluminium side walls, robust, puncture-proof steel floor, tipping angle 45°	
Rear tipper, steel	MB Code / MTFE Code	OS5 / 1K	
		SCATTOLINI rear tipper with steel side walls, robust, puncture-proof steel floor, tipping angle 45°	
DIMENSIONS [MM]			
Wheelbase		2500	2500
Body	Length	3280	3280
	Width	2100	2100
	Floor thickness	2.5	2.5
Overall height incl. subframe		710	710
Dropside height		400	400
Loading height of tipper floor (theoretical figure)[3)]		1065	1065
Height of front wall guard incl. subframe		1535	1535
DIMENSIONS CHASSIS [MM]			
Vehicle overhang, rear		1365	1365
Vehicle overhang, front		1145	1145
WEIGHTS [KG]			
Kerb weight incl. body[4)]	Total	2655 (2683)	2675 (2703)
	Front	1543 (1542)	1585 (1571)
	Rear	1112 (1141)	1090 (1132)
Body weight[4)]		615 (643)	615 (643)
Gross vehicle weight / gross combination weight		3500 / 7000	3500 / 7000
Towed weight	Braked / unbraked	3500 / 750	3500 / 750
Axle loads, chassis	Front	1950	1950
	Rear	2500	2500
Payload[4)]	Total	845 (817)	825 (797)
Axle load reserves, chassis	Total	950	950

● available
– not available

1) Corresponds to MB model code
2) Information for left-hand-drive version only
3) Theoretical figure
4) Side walls in aluminium (steel)

Subject to change without notice. All data is approximate. The illustrations may contain accessories and items of optional equipment which are not part of the standard specification or are not available for all of the models listed. The data sheet may contain product types and support services not available in certain countries.

REAR TIPPER SCATTOLINI
CANTER 3C13
CANTER 3C13 DUONIC® 2.0

VEHICLE TYPE WITH WORKS BODY		3C13	3C13 DUONIC® 2.0
Cab type / crew		Comfort, single cab / 3	
Left-hand/right-hand drive		● / ●	● / ●
Model variant[1) 2)]		46904211	46905211
FUSO model code[2)]		FEB01BL4SEUW	FEB01BL3SEUW
Rear tipper, aluminium	MB Code / MTFE Code	OS4 / 1J SCATTOLINI rear tipper with aluminium side walls, robust, puncture-proof steel floor, tipping angle 45°	
Rear tipper, steel	MB Code / MTFE Code	OS5 / 1K SCATTOLINI rear tipper with steel side walls, robust, puncture-proof steel floor, tipping angle 45°	
OPTIONS			
Material carrier at rear		PZ9 / 1R Material carrier at rear of the platform body for transporting long materials and ladders, weight 17 kg	
Side underride guard		WY3 / 1S Underride guard fitted to the frame at the sides between the axles, aluminium section with plastic end caps, weight 18-20 kg	
Toolbox		WP5 / 1L Plastic toolbox, protected from spray water, measuring 440 × 330 × 280 mm (B × H × D), weight 7 kg	
SCATTOLINI deflector tailgate		OU2 / 1V Deflector mounted on rear dropside, protects against jamming with trailer coupling, weight 1 kg	
Edge protection for aluminium works bodies		OU4 / 1U PVC protection for aluminium dropsides, weight 3 kg	
Edge protection for steel works bodies		OU5 / 1Z PVC protection for steel dropsides, weight 3 kg	
Automatic unlocking of the tailgate		OU6 / 1Y The rear dropside opens automatically during the tipping procedure, weight 6 kg	
OPTIONS (COMPULSORY)			
Body support brackets		CR8 / FK Support brackets on frame to make it easier to mount bodies, weight approx. 6-12 kg (depending on model)	
Batteries, 2 × 12 V / 100 Ah, maintenance-free		EE9 / EL Second battery for higher availability of the electro hydraulic tipper, weight 30 kg	

● available
– not available

1) Corresponds to MB model code
2) Information for left-hand-drive version only

Subject to change without notice. All data is approximate. The illustrations may contain accessories and items of optional equipment which are not part of the standard specification or are not available for all of the models listed. The data sheet may contain product types and support services not available in certain countries.

FUSO – A Daimler Truck Group Brand

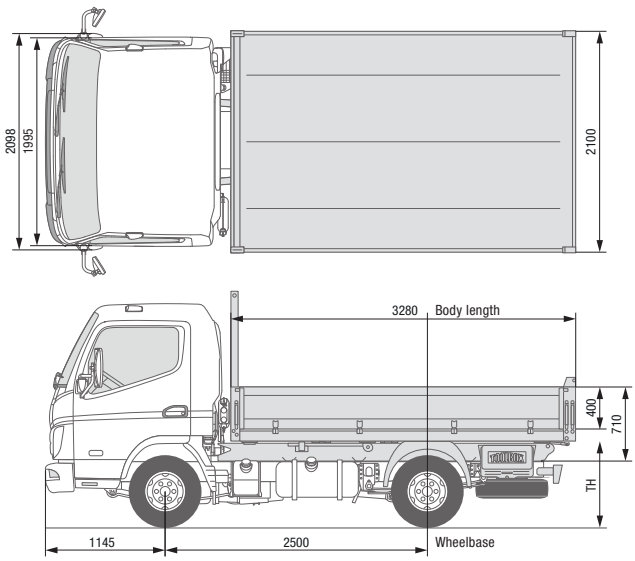

REAR TIPPER SCATTOLINI
CANTER 3C15
CANTER 3C15 DUONIC® 2.0

VEHICLE TYPE WITH WORKS BODY		3C15	3C15 DUONIC® 2.0
Cab type / crew		Comfort, single cab / 3	
Left-hand/right-hand drive		● / –	● / ●
Model variant[1) 2)]		46906211	46907211
FUSO model code[2)]		FEB01BL4SEUX	FEB01BL3SEUX
Rear tipper, aluminium	MB Code / MTFE Code	OS4 / 1J	
		SCATTOLINI rear tipper with aluminium side walls, robust, puncture-proof steel floor, tipping angle 45°	
Rear tipper, steel	MB Code / MTFE Code	OS5 / 1K	
		SCATTOLINI rear tipper with steel side walls, robust, puncture-proof steel floor, tipping angle 45°	
DIMENSIONS [MM]			
Wheelbase		2500	2500
Body	Length	3280	3280
	Width	2100	2100
	Floor thickness	2.5	2.5
Overall height incl. subframe		710	710
Dropside height		400	400
Loading height of tipper floor (theoretical figure)[3)]		1065	1065
Height of front wall guard incl. subframe		1535	1535
DIMENSIONS CHASSIS [MM]			
Vehicle overhang, rear		1365	1365
Vehicle overhang, front		1145	1145
WEIGHTS [KG]			
Kerb weight incl. body[4)]	Total	2655 (2683)	2675 (2703)
	Front	1543 (1542)	1585 (1571)
	Rear	1112 (1141)	1090 (1112)
Body weight[4)]		615 (643)	615 (643)
Gross vehicle weight / gross combination weight		3500 / 7000	3500 / 7000
Towed weight	Braked / unbraked	3500 / 750	3500 / 750
Axle loads, chassis	Front	1950	1950
	Rear	2500	2500
Payload[4)]	Total	845 (817)	825 (797)
Axle load reserves, chassis	Total	950	950

● available
– not available

1) Corresponds to MB model code
2) Information for left-hand-drive version only
3) Theoretical figure
4) Side walls in aluminium (steel)

Subject to change without notice. All data is approximate. The illustrations may contain accessories and items of optional equipment which are not part of the standard specification or are not available for all of the models listed. The data sheet may contain product types and support services not available in certain countries.

REAR TIPPER SCATTOLINI
CANTER 3C15
CANTER 3C15 DUONIC® 2.0

VEHICLE TYPE WITH WORKS BODY		3C15	3C15 DUONIC® 2.0
Cab type / crew		Comfort, single cab / 3	
Left-hand/right-hand drive		● / –	● / ●
Model variant[1) 2)]		46906211	46907211
FUSO model code[2)]		FEB01BL4SEUX	FEB01BL3SEUX
Rear tipper, aluminium	MB Code / MTFE Code	OS4 / 1J	
		SCATTOLINI rear tipper with aluminium side walls, robust, puncture-proof steel floor, tipping angle 45°	
Rear tipper, steel	MB Code / MTFE Code	OS5 / 1K	
		SCATTOLINI rear tipper with steel side walls, robust, puncture-proof steel floor, tipping angle 45°	
OPTIONS			
Material carrier at rear		PZ9 / 1R	
		Material carrier at rear of the platform body for transporting long materials and ladders, weight 17 kg	
Side underride guard		WY3 / 1S	
		Underride guard fitted to the frame at the sides between the axles, aluminium section with plastic end caps, weight 18-20 kg	
Toolbox		WP5 / 1L	
		Plastic toolbox, protected from spray water, measuring 440 × 330 × 280 mm (B × H × D), weight 7 kg	
SCATTOLINI deflector tailgate		OU2 / 1V	
		Deflector mounted on rear dropside, protects against jamming with trailer coupling, weight 1 kg	
Edge protection for aluminium works bodies		OU4 / 1U	
		PVC protection for aluminium dropsides, weight 3 kg	
Edge protection for steel works bodies		OU5 / 1Z	
		PVC protection for steel dropsides, weight 3 kg	
Automatic unlocking of the tailgate		OU6 / 1Y	
		The rear dropside opens automatically during the tipping procedure, weight 6 kg	
OPTIONS (COMPULSORY)			
Body support brackets		CR8 / FK	
		Support brackets on frame to make it easier to mount bodies, weight approx. 6-12 kg (depending on model)	
Batteries, 2 × 12 V / 100 Ah, maintenance-free		EE9 / EL	
		Second battery for higher availability of the electro hydraulic tipper, weight 30 kg	

● available – not available

1) Corresponds to MB model code 2) Information for left-hand-drive version only

Subject to change without notice. All data is approximate. The illustrations may contain accessories and items of optional equipment which are not part of the standard specification or are not available for all of the models listed. The data sheet may contain product types and support services not available in certain countries.

FUSO – A Daimler Truck Group Brand

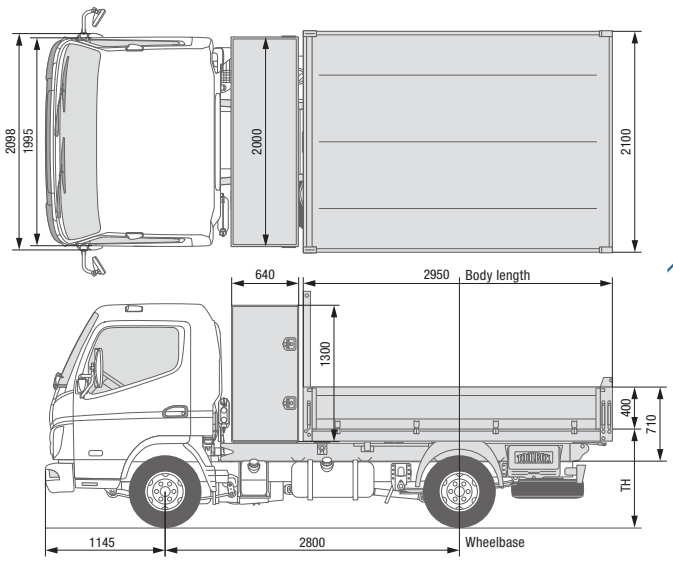

REAR TIPPER SCATTOLINI
CANTER 3C13
CANTER 3C13 DUONIC® 2.0

VEHICLE TYPE WITH WORKS BODY		3C13	3C13 DUONIC® 2.0
Cab type / crew		Comfort, single cab / 3	
Left-hand/right-hand drive		● / ●	● / ●
Model variant[1) 2)]		46904311	46905311
FUSO model code[2)]		FEB01CL4SEUW	FEB01CL3SEUW
Rear tipper with stowage box	MB Code / MTFE Code	OS6 / 1N	
Aluminium		SCATTOLINI rear tipper with lockable stowage box behind the cab (capacity approx. 1660 l, accessible from both sides), tipper with aluminium side walls, tipping angle 45°	
DIMENSIONS [MM]			
Wheelbase		2800	2800
Body	Length	~3650	~3650
	Width	2100	2100
	Floor thickness	2.5	2.5
Overall height incl. subframe		710	710
Dropside height		400	400
Loading height of tipper floor (theoretical figure)[3)]		1065	1065
Height of front wall guard incl. subframe		1535	1535
DIMENSIONS CHASSIS [MM]			
Vehicle overhang, rear		1065	1065
Vehicle overhang, front		1145	1145
WEIGHTS [KG]			
Kerb weight incl. body[4)]	Total	2788	2808
	Front	1648	1668
	Rear	1140	1140
Body weight[4)]		738	738 (778)
Gross vehicle weight / gross combination weight		3500 / 7000	3500 / 7000
Towed weight	Braked / unbraked	3500 / 750	3500 / 750
Axle loads, chassis	Front	1950	1950
	Rear	2500	2500
Payload[4)]	Total	712	692
Axle load reserves, chassis	Total	950	950

● available
– not available

1) Corresponds to MB model code
2) Information for left-hand-drive version only
3) Theoretical figure
4) Side walls in aluminium

Subject to change without notice. All data is approximate. The illustrations may contain accessories and items of optional equipment which are not part of the standard specification or are not available for all of the models listed. The data sheet may contain product types and support services not available in certain countries.

REAR TIPPER SCATTOLINI
CANTER 3C13
CANTER 3C13 DUONIC® 2.0

VEHICLE TYPE WITH WORKS BODY		3C13	3C13 DUONIC® 2.0
Cab type / crew		Comfort, single cab / 3	
Left-hand/right-hand drive		● / ●	● / ●
Model variant[1) 2)]		46904311	46905311
FUSO model code[2)]		FEB01CL4SEUW	FEB01CL3SEUW
Rear tipper with stowage box, aluminium	MB Code / MTFE Code	OS6 / 1N SCATTOLINI rear tipper with lockable stowage box behind the cab (capacity approx. 1660 l, accessible from both sides), tipper with aluminium side walls, tipping angle 45°	
Rear tipper with stowage box, steel	MB Code / MTFE Code	OS7 / 1P SCATTOLINI rear tipper with lockable stowage box behind the cab (capacity approx. 1660 l, accessible from both sides), tipper with steel side walls, tipping angle 45°	
OPTIONS			
Material carrier at rear		PZ9 / 1R Material carrier at rear of the platform body for transporting long materials and ladders, weight 17 kg	
Side underride guard		WY3 / 1S Underride guard fitted to the frame at the sides between the axles, aluminium section with plastic end caps, weight 18-20 kg	
Toolbox		WP5 / 1L Plastic toolbox, protected from spray water, measuring 440 × 330 × 280 mm (B × H × D), weight 7 kg	
SCATTOLINI deflector tailgate		OU2 / 1V Deflector mounted on rear dropside, protects against jamming with trailer coupling, weight 1 kg	
Edge protection for aluminium works bodies		OU4 / 1U PVC protection for aluminium dropsides, weight 3 kg	
Automatic unlocking of the tailgate		OU6 / 1Y The rear dropside opens automatically during the tipping procedure, weight 6 kg	
OPTIONS (COMPULSORY)			
Body support brackets		CR8 / FK Support brackets on frame to make it easier to mount bodies, weight approx. 6-12 kg (depending on model)	
Batteries, 2 × 12 V / 100 Ah, maintenance-free		EE9 / EL Second battery for higher availability of the electro hydraulic tipper, weight 30 kg	

● available
– not available

1) Corresponds to MB model code
2) Information for left-hand-drive version only

Subject to change without notice. All data is approximate. The illustrations may contain accessories and items of optional equipment which are not part of the standard specification or are not available for all of the models listed. The data sheet may contain product types and support services not available in certain countries.

FUSO – A Daimler Truck Group Brand

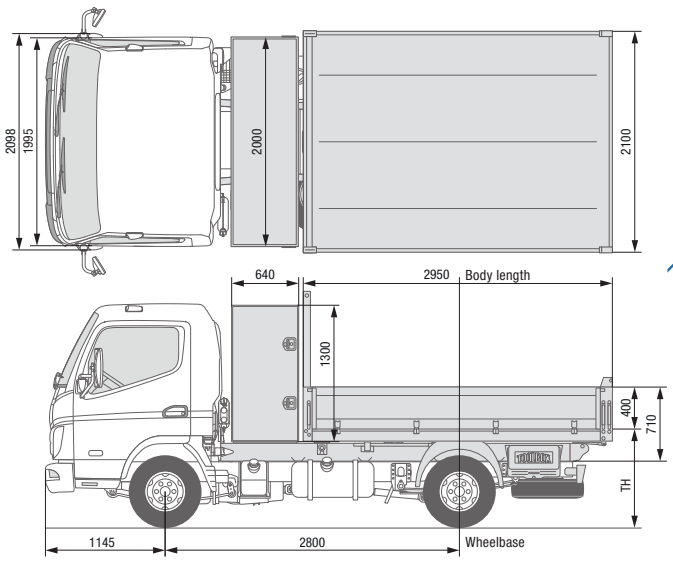

REAR TIPPER SCATTOLINI
CANTER 3C15
CANTER 3C15 DUONIC® 2.0

VEHICLE TYPE WITH WORKS BODY		3C15	3C15 DUONIC® 2.0
Cab type / crew		Comfort, single cab / 3	
Left-hand/right-hand drive		● / –	● / ●
Model variant[1) 2)]		46906311	46907311
FUSO model code[2)]		FEB01CL4SEUX	FEB01CL3SEUX
Rear tipper with stowage box	MB Code / MTFE Code	OS6 / 1N	
Aluminium		SCATTOLINI rear tipper with lockable stowage box behind the cab (capacity approx. 1660 l, accessible from both sides), tipper with aluminium side walls, tipping angle 45°	
DIMENSIONS [MM]			
Wheelbase		2800	2800
Body	Length	~3650	~3650
	Width	2100	2100
	Floor thickness	2.5	2.5
Overall height incl. subframe		710	710
Dropside height		400	400
Loading height of tipper floor (theoretical figure)[3)]		1065	1065
Height of front wall guard incl. subframe		1535	1535
DIMENSIONS CHASSIS [MM]			
Vehicle overhang, rear		1435	1435
Vehicle overhang, front		1145	1145
WEIGHTS [KG]			
Kerb weight incl. body[4)]	Total	2788	2808
	Front	1648	1668
	Rear	1140	1140
Body weight[4)]		738	738
Gross vehicle weight / gross combination weight		3500 / 7000	3500 / 7000
Towed weight	Braked / unbraked	3500 / 750	3500 / 750
Axle loads, chassis	Front	1950	1950
	Rear	2500	2500
Payload[4)]	Total	712	692
Axle load reserves, chassis	Total	950	950

● available
– not available

1) Corresponds to MB model code
2) Information for left-hand-drive version only
3) Theoretical figure
4) Side walls in aluminium

Subject to change without notice. All data is approximate. The illustrations may contain accessories and items of optional equipment which are not part of the standard specification or are not available for all of the models listed. The data sheet may contain product types and support services not available in certain countries.

REAR TIPPER SCATTOLINI
CANTER 3C15
CANTER 3C15 DUONIC® 2.0

VEHICLE TYPE WITH WORKS BODY		3C15	3C15 DUONIC® 2.0
Cab type / crew		Comfort, single cab / 3	
Left-hand/right-hand drive		● / –	● / ●
Model variant[1) 2)]		46906311	46907311
FUSO model code[2)]		FEB01CL4SEUX	FEB01CL3SEUX
Rear tipper with stowage box, aluminium	MB Code / MTFE Code	OS6 / 1N SCATTOLINI rear tipper with lockable stowage box behind the cab (capacity approx. 1660 l, accessible from both sides), tipper with aluminium side walls, tipping angle 45°	
Rear tipper with stowage box, steel	MB Code / MTFE Code	OS7 / 1P SCATTOLINI rear tipper with lockable stowage box behind the cab (capacity approx. 1660 l, accessible from both sides), tipper with steel side walls, tipping angle 45°	
OPTIONS			
Material carrier at rear		PZ9 / 1R Material carrier at rear of the platform body for transporting long materials and ladders, weight 17 kg	
Side underride guard		WY3 / 1S Underride guard fitted to the frame at the sides between the axles, aluminium section with plastic end caps, weight 18-20 kg	
Toolbox		WP5 / 1L Plastic toolbox, protected from spray water, measuring 440 × 330 × 280 mm (B × H × D), weight 7 kg	
SCATTOLINI deflector tailgate		OU2 / 1V Deflector mounted on rear dropside, protects against jamming with trailer coupling, weight 1 kg	
Edge protection for aluminium works bodies		OU4 / 1U PVC protection for aluminium dropsides, weight 3 kg	
Automatic unlocking of the tailgate		OU6 / 1Y The rear dropside opens automatically during the tipping procedure, weight 6 kg	
OPTIONS (COMPULSORY)			
Body support brackets		CR8 / FK Support brackets on frame to make it easier to mount bodies, weight approx. 6-12 kg (depending on model)	
Batteries, 2 × 12 V / 100 Ah, maintenance-free		EE9 / EL Second battery for higher availability of the electro hydraulic tipper, weight 30 kg	

● available
– not available

1) Corresponds to MB model code
2) Information for left-hand-drive version only

Subject to change without notice. All data is approximate. The illustrations may contain accessories and items of optional equipment which are not part of the standard specification or are not available for all of the models listed. The data sheet may contain product types and support services not available in certain countries.

FUSO – A Daimler Truck Group Brand

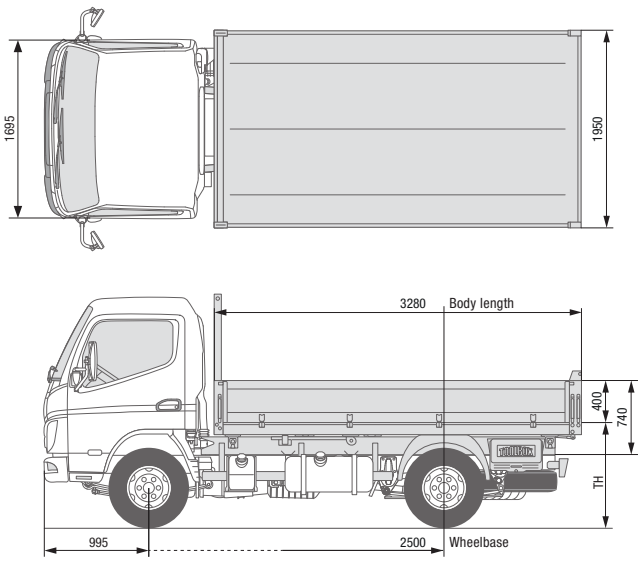

THREE-WAY TIPPER SCATTOLINI
CANTER 6S15
LEFT-HAND DRIVE

VEHICLE TYPE WITH WORKS BODY		6S15
Cab type / crew		Standard, single cab / 3
Left-hand/right-hand drive		● / –
Model variant[1) 2)]		46920212
FUSO model code[2)]		FEA51BL4SEUB
Three-way tipper, steel	MB Code / MTFE Code	OS3 / 1H SCATTOLINI three-way tipper with steel side walls, robust, puncture-proof steel floor, tipping angle 43°/45°
DIMENSIONS [MM]		
Wheelbase		2500
Body	Length	3280
	Width	1950
	Dropside wall thickness	33
	Floor thickness	2.5
Loading height of tipper floor (TH)[3)]		1155
Dropside height		400
Overall height incl. subframe		740
Height of front wall guard incl. subframe		1470
DIMENSIONS CHASSIS [MM]		
Vehicle overhang, rear		1403
Vehicle overhang, front		995
WEIGHTS [KG]		
Kerb weight incl. body	Total	2988
	Front	1485
	Rear	1503
Body weight		733
Gross vehicle weight / gross combination weight		6000 / 9000
Towed weight	Braked / unbraked	3000 / 750
Axle loads, chassis	Front	2300
	Rear	4360
Payload	Total	3012
Axle load reserves, chassis	Total	660

● available
– not available

1) Corresponds to MB model code
2) Information for left-hand-drive version only
3) Theoretical figure

Subject to change without notice. All data is approximate. The illustrations may contain accessories and items of optional equipment which are not part of the standard specification or are not available for all of the models listed. The data sheet may contain product types and support services not available in certain countries.

THREE-WAY TIPPER SCATTOLINI
CANTER 6S15
LEFT-HAND DRIVE

VEHICLE TYPE WITH WORKS BODY		6S15
Cab type / crew		Standard, single cab / 3
Left-hand/right-hand drive		● / –
Model variant[1) 2)]		46920212
FUSO model code[2)]		FEA51BL4SEUB
Three-way tipper, steel	MB Code / MTFE Code	OS3 / 1H SCATTOLINI three-way tipper with steel side walls, robust, puncture-proof steel floor, tipping angle 43°/45°
OPTIONS		
Protective grate for tail lamps		LH6 / 1T Tail lamps protected by a grate of vertical and horizontal struts, weight 2 × 2 kg
Material carrier at rear		PZ9 / 1R Material carrier at rear of the tipper body for transporting long materials and ladders, weight 17 kg
Toolbox		WP5 / 1L Plastic toolbox, protected from spray water, measuring 440 × 330 × 280 mm (B × H × D), weight 7 kg
Edge protection for steel works bodies		OU5 / 1Z PVC protection for steel dropsides, weight 3 kg
OPTIONS (COMPULSORY)		
Body support brackets		CR8 / FK Support brackets on frame to make it easier to mount bodies, shackles riveted to the chassis frame. Weight approx. 6-12 kg (depending on model)
Further compulsory options		NQ7/ GJ – Transmission PTO 31 kW for hydraulic pump VA6 / DT – Hand-throttle actuator for engine speed
Rear underride guard SCATTOLINI		C09 / 2X

● available
– not available

1) Corresponds to MB model code
2) Information for left-hand-drive version only

Subject to change without notice. All data is approximate. The illustrations may contain accessories and items of optional equipment which are not part of the standard specification or are not available for all of the models listed. The data sheet may contain product types and support services not available in certain countries.

FUSO – A Daimler Truck Group Brand

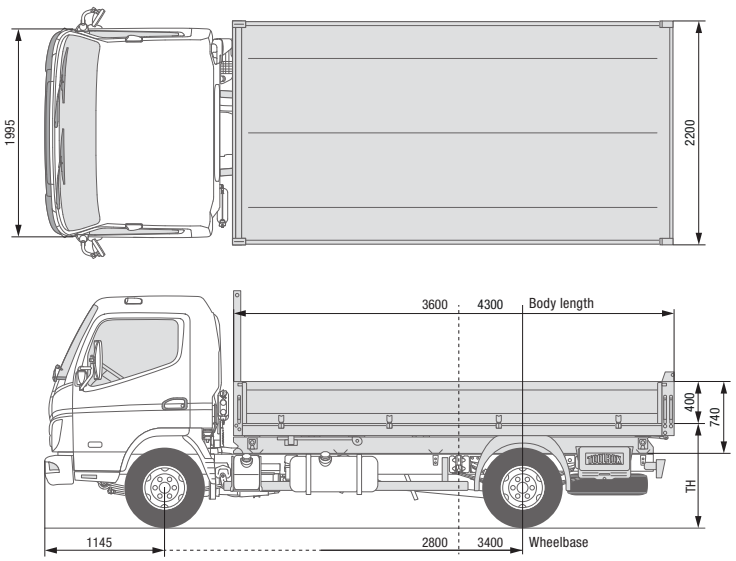

THREE-WAY TIPPER SCATTOLINI
CANTER 7C15
CANTER 7C15 DUONIC® 2.0

VEHICLE TYPE WITH WORKS BODY		7C15		7C15 DUONIC® 2.0	
Cab type / crew		Comfort, single cab / 3			
Left-hand/right-hand drive		● / ●	● / ●	● / ●	● / ●
Model variant[1) 2)]		46922312	46922512	46923312	46923812
FUSO model code[2)]		FEB71CL4SEUB	FEB71EL4SEUB	FEB71CL3SEUB	FEB71EL3SEUB
Three-way tipper, steel	MB Code / MTFE Code	OS3 / 1H			
		SCATTOLINI three-way tipper with steel side walls, robust, puncture-proof steel floor, tipping angle 43°/45°			
DIMENSIONS [MM]					
Wheelbase		2800	3400	2800	3400
Body	Length	3600	4300	3600	4300
	Width	2200	2200	2200	2200
	Dropside wall thickness	33	33	33	33
	Floor thickness	2.5	2.5	2.5	2.5
Loading height of tipper floor (TH)[3)]		1170	1170	1170	1170
Dropside height		400	400	400	400
Overall height incl. subframe		740	740	740	740
Height of front wall guard incl. subframe		1514		1514	
DIMENSIONS CHASSIS [MM]					
Vehicle overhang, rear		1443	1555	1443	1555
Vehicle overhang, front		1145	1145	1145	1145
WEIGHTS [KG]					
Kerb weight incl. body	Total	3343	3438	3413	3513
	Front	1780	1937	1822	1861
	Rear	1563	1501	1591	1652
Body weight		783	843	783	843
Gross vehicle weight / gross combination weight		7490 / 10990			
Towed weight	Braked / unbraked	3500 / 750			
Axle loads, chassis	Front	3100			
	Rear	5800			
Payload	Total	4147	4052	4077	3977
Axle load reserves, chassis	Total	1410			

● available
– not available

1) Corresponds to MB model code
2) Information for left-hand-drive version only
3) Theoretical figure

Subject to change without notice. All data is approximate. The illustrations may contain accessories and items of optional equipment which are not part of the standard specification or are not available for all of the models listed. The data sheet may contain product types and support services not available in certain countries.

THREE-WAY TIPPER SCATTOLINI
CANTER 7C15
CANTER 7C15 DUONIC® 2.0

VEHICLE TYPE WITH WORKS BODY		7C15		7C15 DUONIC® 2.0	
Cab type / crew		Comfort, single cab / 3			
Left-hand/right-hand drive		● / ●	● / ●	● / ●	● / ●
Model variant[1) 2)]		46922312	46922512	46923312	46923812
FUSO model code[2)]		FEB71CL4SEUB	FEB71EL4SEUB	FEB71CL3SEUB	FEB71EL3SEUB
Three-way tipper, steel	MB Code / MTFE Code	OS3 / 1H SCATTOLINI three-way tipper with steel side walls, robust, puncture-proof steel floor, tipping angle 43°/45°			
OPTIONS					
Protective grate for tail lamps		LH6 / 1T Tail lamps protected by a grate of vertical and horizontal struts, weight 2 × 2 kg			
Material carrier at rear		PZ9 / 1R Material carrier at rear of the tipper body for transporting long materials and ladders, weight 18 kg			
Toolbox		WP5 / 1L Plastic toolbox, protected from spray water, measuring 440 × 330 × 280 mm (B × H × D), weight 7 kg			
Edge protection for steel works bodies		OU5 / 1Z PVC protection for steel dropsides, weight 3 kg			
Automatic unlocking of the tailgate		OU6 / 1Y The rear dropside opens automatically during the tipping procedure, weight 6 kg			
OPTIONS (COMPULSORY)					
Body support brackets		CR8 / FK Support brackets on frame to make it easier to mount bodies, shackles riveted to the chassis frame, weight approx. 6-12 kg (depending on model)			
Further compulsory options		NQ7/ GJ – Transmission PTO 31 kW for hydraulic pump VA6 / DT – Hand-throttle actuator for engine speed			
Rear underride guard SCATTOLINI		C09 / 2X			

● available
– not available

1) Corresponds to MB model code
2) Information for left-hand-drive version only

Subject to change without notice. All data is approximate. The illustrations may contain accessories and items of optional equipment which are not part of the standard specification or are not available for all of the models listed. The data sheet may contain product types and support services not available in certain countries.

FUSO – A Daimler Truck Group Brand

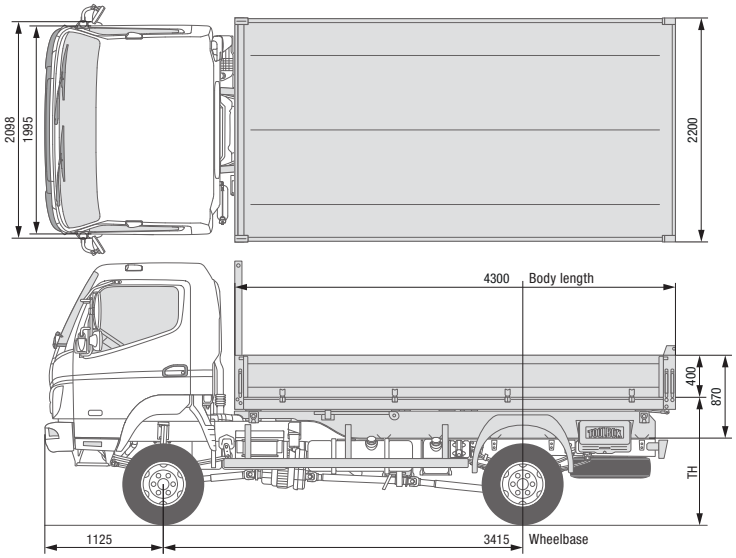

THREE-WAY TIPPER SCATTOLINI
CANTER 6C18 4×4

VEHICLE TYPE WITH WORKS BODY		6C18 4×4	6C18 4×4
Cab type / crew		Comfort, single cab / 3	
Left-hand/right-hand drive		Left-hand drive	Right-hand drive
Model variant[1) 2)]		46911512	46911522
FUSO model code[2)]		FGB71EL6SEUY	FGB71ER6SEUY
Three-way tipper, steel	MB Code / MTFE Code	OS3 / 1H	
		SCATTOLINI three-way tipper with steel side walls, robust, puncture-proof steel floor, tipping angle 43°/45°	
DIMENSIONS [MM]			
Wheelbase		3415	3415
Body	Length	4300	4300
	Width	2200	2200
	Dropside wall thickness	33	33
	Floor thickness	2.5	2.5
Loading height of tipper floor (theoretical figure)[2)]		1360	1360
Dropside height		400	400
Overall height incl. subframe		870	870
Height of front wall guard incl. subframe		1514	1514
DIMENSIONS CHASSIS [MM]			
Vehicle overhang, rear		1555	1555
Vehicle overhang, front		1125	1125
WEIGHTS [KG]			
Kerb weight incl. body	Total	4025	4025
	Front	2114	2114
	Rear	1911	1911
Body weight		1200	1200
Gross vehicle weight / gross combination weight		6500 / 10000	6500 / 10000
Towed weight	Braked / unbraked	3500 / 750	3500 / 750
Axle loads, chassis	Front	2800	2800
	Rear	5125	5125
Payload	Total	2475	2475
Axle load reserves, chassis	Total	2300	2300

● available
– not available

1) Corresponds to MB model code
2) Theoretical figure

Subject to change without notice. All data is approximate. The illustrations may contain accessories and items of optional equipment which are not part of the standard specification or are not available for all of the models listed. The data sheet may contain product types and support services not available in certain countries.

THREE-WAY TIPPER SCATTOLINI
CANTER 6C18 4×4

VEHICLE TYPE WITH WORKS BODY		6C18 4×4	6C18 4×4
Cab type / crew		Comfort, single cab / 3	
Left-hand/right-hand drive		Left-hand drive	Right-hand drive
Model variant[1) 2)]		46911512	46911522
FUSO model code[2)]		FGB71EL6SEUY	FGB71ER6SEUY
Three-way tipper, steel	MB Code / MTFE Code	OS3 / 1H SCATTOLINI three-way tipper with steel side walls, robust, puncture-proof steel floor, tipping angle 43°/45°	
OPTIONS			
Protective grate for tail lamps		LH6 / 1T Tail lamps protected by a grate of vertical and horizontal struts, weight 2 × 2 kg	
Material carrier at rear		PZ9 / 1R Material carrier at rear of the tipper body for transporting long materials and ladders, weight 17 kg	
Toolbox		WP5 / 1L Plastic toolbox, protected from spray water, measuring 440 × 330 × 280 mm (B × H × D), weight 7 kg	
Edge protection for steel works bodies		OU5 / 1Z PVC protection for steel dropsides, weight 3 kg	
Automatic unlocking of the tailgate		OU6 / 1Y The rear dropside opens automatically during the tipping procedure, weight 6 kg	
OPTIONS (COMPULSORY)			
Standard rear underride guard		C06 / EE Rear underride guard in EC design fitted under the end cross member, including tail lights on separate cross member, weight 18 kg	
Rear underride guard with socket, and coupling ball (alternative to C06 / EE)		C08 / ET Rear underride guard as reinforced rear bumper with ball head coupling, including 13-pin socket and tail lights on separate cross member, weight 52 kg	
Body support brackets		CR8 / FK Support brackets on frame to make it easier to mount bodies, shackles riveted to the chassis frame, weight approx. 6-12 kg (depending on model)	
Further compulsory options		NQ7/ GJ – Transmission PTO 31 kW for hydraulic pump VA6 / DT – Hand-throttle actuator for engine speed	
Side underride guard		WY3 / 1S – Side underride guard, already standard equipment for N2 vehicle models	

● available
– not available

1) Corresponds to MB model code

Subject to change without notice. All data is approximate. The illustrations may contain accessories and items of optional equipment which are not part of the standard specification or are not available for all of the models listed. The data sheet may contain product types and support services not available in certain countries.